Seat No.: _____ Enrolment No._____

GUJARAT TECHNOLOGICAL UNIVERSITY

BE. ARCH. - SEMESTER– I • EXAMINATION – WINTER 2012

Subject code: 1015004 **Date: 17-01-2013**

Subject Name: Structure – I

Time: 10:30 am – 12:30 pm **Total Marks: 50**

Instructions:

1. **Attempt any five questions. Q.1 is Compulsory**
2. **Make suitable assumptions wherever necessary.**
3. **Figures to the right indicate full marks.**
4. **Each question carry equal marks (10 marks)**

Q.1 List various structural members in buildings. Explain any five members in details with their function/use, load transfer pattern, type of stresses resisted and their types based on materials used, shapes, design criteria etc. **10**

Q.2 Write short note: (Any TWO) **10**

(a) Dead loads, Live loads and Wind load

(b) Types of buildings based on load transfer pattern

(c) Types of buildings based upon their use

Q.3 Explain following: (Any TWO) **10**

(a) Law of parallelogram (Explain with two forces 50KN & 30KN and 60 degree angle between them.

(b) Law of Physical independence

(c) Law of moments

Q.4 Answer any TWO: **10**

(a) Define: (i) Composition of forces (ii) Moment & couple (iii) Equilibrium (iv) Line of action of a force (v) Resultant force

(b) Define force system. Explain various types of forces in a force system.

(c) Find the resultant of the given force system in Fig. No. 1.

Q.5 Answer any TWO: **10**

(a) Differentiate between Load bearing and Frame structure buildings

(b) Explain with example the load transfer pattern in a frame structure building having two rooms of 5mX5m at each floor. Assume two floors. Sketch the layout of slabs, beams, columns. Assume suitable data and mention the same.

(c) Find the resultant of the given force system in Fig. No. 2.

Q. 6 Define centre of gravity. What is the need of finding c.g. of various building elements? Find the c.g. of ANY TWO sections shown in Fig. 3, 4 & 5. **10**

Q. 7 Explain moment of Inertia and its importance. Find the M.I. of ANY ONE sections shown in Fig. 4 & 5. **10**

****

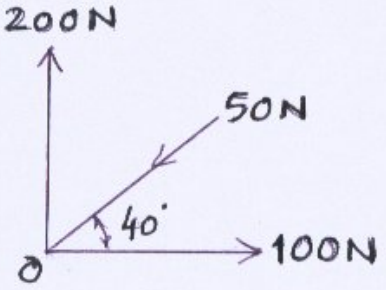

Fig. No. 1

Q.4. (c)

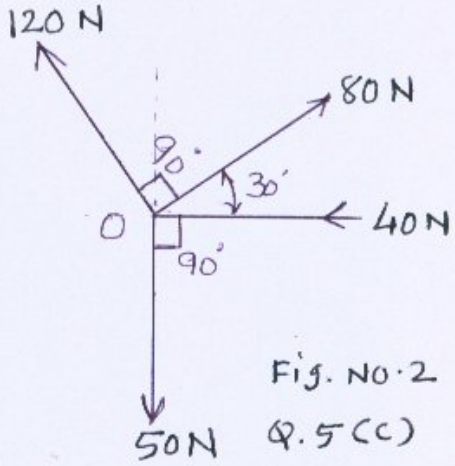

Fig. No. 2

Q. 5 (c)

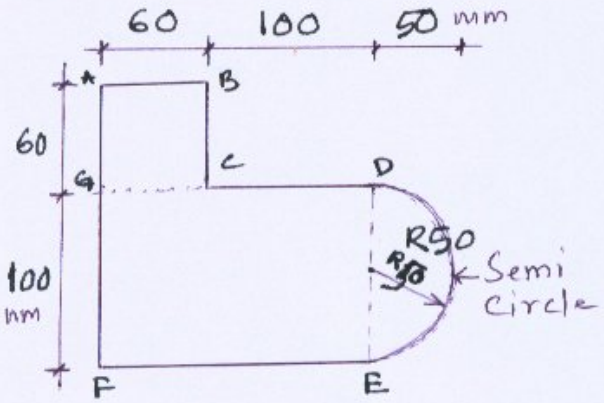

Fig. No. 3

Q. 6-7

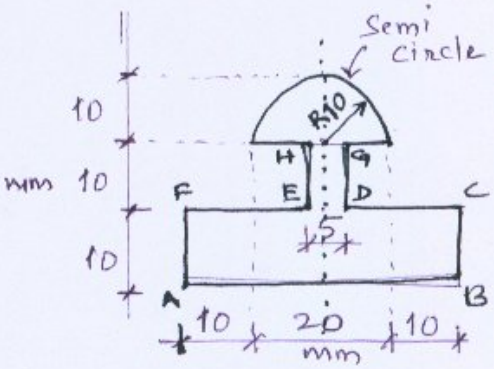

Fig. No. 4
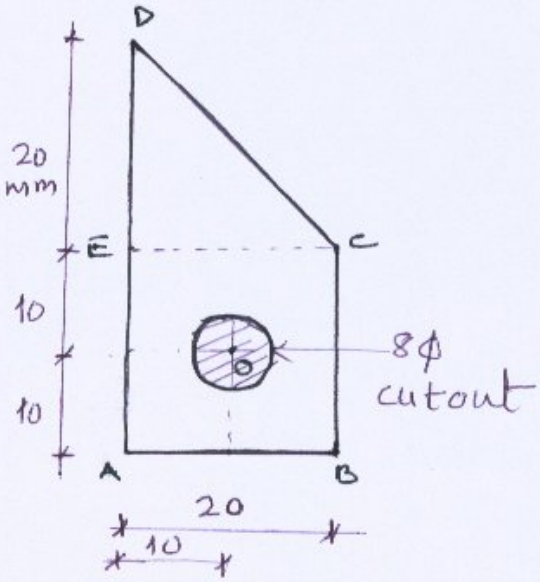
Q. 6-7