Seat No.: _____ Enrolment No._____

GUJARAT TECHNOLOGICAL UNIVERSITY

B.E. Sem-III Examination December 2009

Subject code: 132001 **Subject Name: Industrial Drafting**

Date: 23 / 12/ 2009 **Time: 11.00 am – 2.00 pm**

Total Marks: 70

Instructions:

1. **Attempt all questions.**
2. **Make suitable assumptions wherever necessary.**
3. **Figures to the right indicate full marks.**

Q.1 **(a)** A vertical square prism, base 50 mm side, is completely penetrated by a horizontal square prism, base 35 mm side, so that their axes bisect each other. The axis of the horizontal prism is parallel to the VP, while the faces of the two prisms are equally inclined to the VP. Draw the projections of the solids, showing lines of intersection. (Assume suitable lengths for the prisms.) **07**

(b) Draw the side view from the left by the same method of projection as used in the given views. **07**

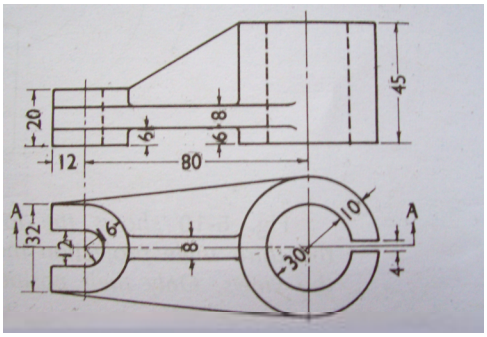

Q.2 **(a)** Draw according to the first-angle projection method: **07**

1. Sectional front view, section A-A.
2. Sectional top view, section B-B.

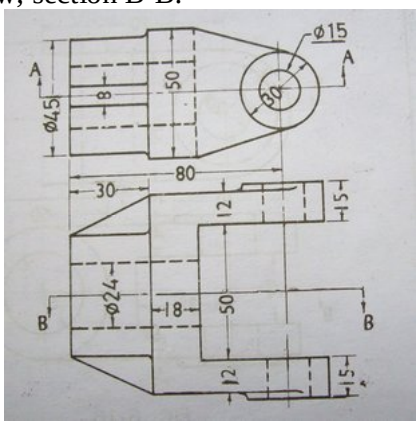

(b) A vertical cylinder of 75 mm diameter is penetrated by another cylinder of 40 mm diameter, the axis of which is parallel to both the HP and VP. The two axes are 8 mm apart. Draw the projections showing lines of intersection. **07**

OR

(b) A vertical cone, base 80 mm diameter , axis 100 mm ling, is penetrated by a horizontal cylinder of 40 mm diameter, the axis of which is 25 mm above the base of the cone, parallel to the VP and 6 mm away from the axis of the cone. Draw the projections, showing lines of intersection. **07**

Q.3 **(a)** Sketch neatly, giving important dimensions. **07**

1. Rag foundation bolt.
2. Lewis foundation bolt.

(b) Draw the three views of a hexagonal-headed bolt, 24 mm diameter and 100 mm long, with a hexagonal nut and a washer. **07**

OR

Q.3 **(a)** Draw dimensioned sketches of the following forms of screw threads: **07**

1. Acme thread
2. Buttress thread

(b) Draw neat sketches of Castle nut and Ring nut. **07**

Q.4 **(a)** Sketch neatly, the following types of taper keys, fitted in position on a 50 mm diameter shaft showing two views in each case, giving complete digestions. **07**

1. Flat saddle key.
2. Sunk key with gib-head.

(b) Prepare a dimensioned sketch, in two views, of a socket and spigot joint for two 25 mm diameter rods. **07**

OR

Q.4 **(a)** Explain with the aid of sketches, the use of **07**

1. Woodruff key
2. Round key

(b) Prepare a dimensioned sketch, of a knuckle joint for two 30 mm diameter rods. **07**

Q.5 **(a)** 1. What is geometrical tolerance and dimensional tolerance? **03**

2. Define fits, basic size and nominal size, allowance. **04**

(b) Explain the advantages and disadvantages of a Computer Aided Drafting (CAD). **07**

OR

Q.5 **(a)** Draw the free hand sketch for the conventional representation of glass, concrete, splined shaft and bearing. **07**

(b) Make a list of commands used for drawing the following figure using Auto-CAD. **07**

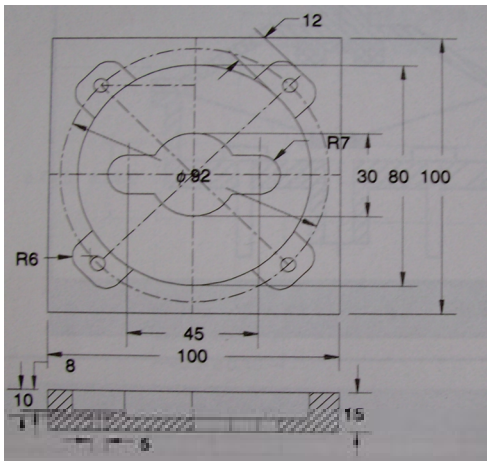

****