Seat No.: _____ Enrolment No._____

GUJARAT TECHNOLOGICAL UNIVERSITY

B.E. Sem-III Remedial Examination March 2010

Subject code: 130103

Subject Name: Analysis of Mechanism & Machine Elements

Date: 11 /03 / 2010 **Time:03.00 pm – 05.30 pm**

Total Marks: 70

Instructions:

1. **Attempt all questions.**
2. **Make suitable assumptions wherever necessary.**
3. **Figures to the right indicate full marks.**

Q.1 **(a)** Explain Free body diagram of a mechanism with neat sketch. **03**

(b) The dimensions of a four-link mechanism are: AB = 400 mm, BC = 600 mm, CD = 500 mm, AD = 900mm and angle between Ad and AB is 60^0. AD is the fixed link. E is a point on link BC such that BE = 400 mm and CE = 300 mm (BEC clockwise). A force of 150 angle 45^0 N acts on DC at point F, 250 mm away from D. Another force of magnitude 100 angle 180^0 N acts at a point E. Find the required input torque on link AB for static equilibrium of the mechanism. **11**

Q.2 **(a)** State D' Alembert's principle. How it helps in solving dynamic analysis problem? **05**

(b) Explain applied forces and constraint forces. **02**

(c) Define: Element, Pair, Chain, Mechanism and Machines. **07**

OR

(c) With help of neat sketches explain different types of kinematic pairs. **07**

Q.3 **(a)** For the mechanism shown in **Fig. 1,** draw velocity diagram and find out absolute velocity of point E and rubbing velocities at all the joint for equal radii of 20 mm. Take angular velocity of crank AB equal to 20 rad / s in counter clockwise direction. **07**

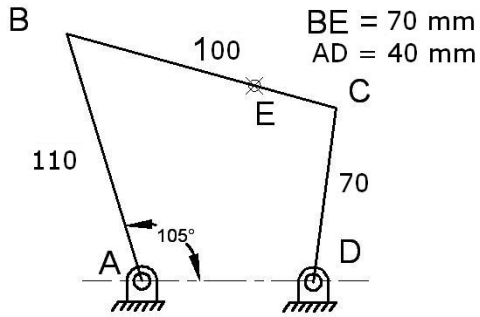

Fig. 1

(b) For the mechanism shown in Fig. 1 (Q-3, a), draw acceleration diagram and find out the absolute acceleration of point C and E. **07**

OR

Q.3 **(a)** With help of neat sketches explain Quick-return mechanism. **07**

(b) What do you mean by I center and Centrode? With help of sketch explain Kennedy's theorem. **07**

Q.4 **(a)** For a single cylinder reciprocating engine give, expression for (i) Piston effort (ii) Crank effort and (iii) Turning moment on crank shaft. **06**

(b) The effective steam pressure on the piston of a vertical steam engine is 400 kN/ mm^2. When the crank is 40^0 from the inner-dead centre on the down stroke. The crank length is 250 mm and that of connecting rod is 1000mm. The diameter of the cylinder is 650 mm. What will be the torque on the crank shaft if the engine speed is 300 rpm and the mass of the reciprocating parts 250kg? **08**

OR

Q.4 **(a)** Deduce the expression of inertia force on the piston of a slider crank mechanism in terms of angular velocity of the crank, length of crank and connecting rod and mass of the piston. **06**

(b) A horizontal gas engine running at 200 rpm has a bore of 210 mm and a stroke of 420 mm. The connecting rod is 800 mm long and the reciprocating parts weight 20 kg. When the crank has turned through an angle of 30^0 from the inner dead centre, the gas pressure on the cover and the crank sides are 500 kN / m^2 and 60 kN / m^2. The diameter of piston rod is 40 mm. Determine, **08**

(i) turning moment on the crank shaft,

(ii) thrust on the bearing,

(iii) Acceleration of the flywheel, which has a mass of 8 kg and radius of gyration of 600 mm. While the load is 22kN.

Q.5 **(a)** A pump is driven by 10kW, 1400 rpm electric motor. There is a reduction gear box between the motor and the pump. The pump shaft rotates at 480 rpm. The design torque is 150% of the rated torque. The motor and pump shafts are made of plain carbon steel 40C8 (S_{yt} = 380 N/mm^2) and the factor of safety is 4. Calculate the diameter of motor & pump shaft. **07**

(c) Give the expression of length of a square key in term of the diameter of the shaft assuming both key and shaft are of same material and width and thickness of the key is one-forth of the shaft diameter. **07**

OR

Q.5 **(a)** A rotating shaft, 40 mm in diameter, is made of steel FeE 580 (S_t = 580 N / mm^2). It is subjected to a steady torsion moment of 250 Nm and bending moment of 1250 Nm. Calculate the factor of safety available based on (1) Maximum principal stress theory, and (2) Maximum shear stress theory. **08**

(b) State the advantages of welded joint over riveted joint. Also explain the design procedure of riveted joint. **06**

****