Seat No.: _____ Enrolment No._____

GUJARAT TECHNOLOGICAL UNIVERSITY

BE- SEMESTER 1st / 2nd EXAMINATION (OLD SYLLABUS) – SUMMER - 2017

Subject Code: 110013 **Date:08/06/2017**

Subject Name: Engineering Graphics

Time: 2:30 PM to 05:30 PM **Total Marks: 70**

Instructions:

1. Attempt any five questions.
2. Make suitable assumptions wherever necessary and mention it clearly.
3. Figures to the right indicate full marks.
4. Draw neat sketches wherever required to justify the answer.
5. Don't rube construction lines.

Q.1	**(a)**	OPA is an offset slider crank chain, crank OP is 30 mm long and rotates in clockwise direction. Connecting rod AP is 130 mm long and the offset is 40 mm. Draw the loci of two points - M (midpoint of AP) and R on the extension of connecting rod AP at distance equal to PR = 30 mm.	**07**
	(b)	(i) Write shortnote on: Aligned system and uni-directional system of dimensioning.	**03**
		(ii) On a map of Gujarat, 1 cm represents 5 kms. Construct a plain scale long enough to measure a distance between Sanand and Surendranagar – 100 kms. Also indicate the distance between Surendranagar and Viramgam – 65 kms.	**04**
Q.2	**(a)**	A straight line AB is 75 mm long and inclined at 35^0 to H.P and 55^0 to V.P. The end A on the H.P and 15 mm in front of V.P. Draw projections of straight line AB assuming to be in the first quadrant.	**07**
	(b)	A circle of 50 mm diameter rolls along a straight line without slipping. Draw the curve traced out by the point P on the periphery of the circle. Take the initial position the point P at the bottom on vertical centre line of the circle. Name the curve.	**07**
Q.3	**(a)**	A pentagonal pyramid of base edge 30 mm and height 60 mm rests on the HP such that one of its edge of base is parallel to and nearer to the VP. The pyramid is cut by a plane inclined 40º to the HP at 35 mm on axis from base of the pyramid. Draw the lateral development of the truncated pyramid.	**07**
	(b)	A line AB 75 mm long is inclined at 35˚ to the V.P. The end A is 20 mm above the H.P and 15 mm in front of V.P. The plan length of the line is 50 mm. Draw projections of straight line AB assuming to be in the first quadrant and find the inclination with H.P.	**07**
Q.4	**(a)**	Two fixed points P and Q are 80 mm apart. Trace the complete path of a point P moving (in the same plane as that of P and Q) in such a way that, the sum of its distances from P and Q is always the same and equal to 100 mm. Name the curve.	**07**
	(b)	A thin 30˚-60˚ set square has its longest edge in the V.P. and inclined at 30˚ the H.P. The length of the shortest side is 35 mm. Its surface makes an angle of 45˚ with the V.P. Draw the projections of set square.	**07**
Q.5	**(a)**	A cylinder, diameter of base 70 mm and axis 90 mm is resting on one of its generator on the H.P. with its axis remaining parallel to V.P. It is cut by an A.V.P. inclined to the V.P. by 30^0 and passing through the point on the axis 50 mm from its one end. Draw sectional elevation, sectional end view and plan showing the cutting plane.	**07**

(b) A square pyramid, base 30 mm side and axis 70 mm long, is resting on H.P. on one of its corner of its base in such a way that slant edge opposite to the corner on H.P. is making an angle of 30^0 to H.P and 35^0 to V.P. Draw its projections. **07**

Q.6 **(a)** Answer the following (any ONE) : **04**

(i) List and draw basic types of lines recommended by BIS.

(ii) Engineering graphics is a language of all persons involved in engineering activities. Explain the given statement.

(b) Draw the isometric view from the following given orthographic views (figure no. 1). **10**

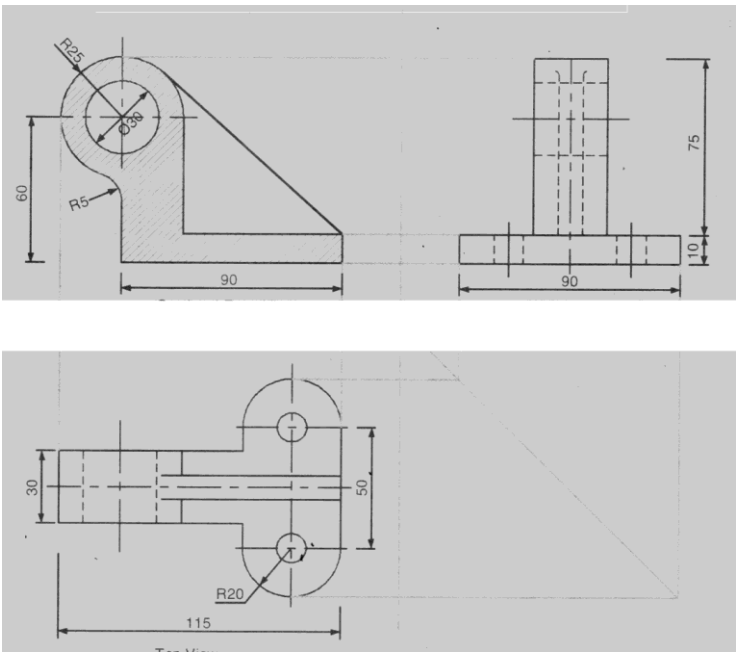

figure no. 1

Q.7 **(a)** Answer the following (any ONE) : **04**

(i) Explain the 3rd angle orthographic projection system. Draw the symbols of 1st and 3rd angle orthographic projection system.

(ii) Write short note on BIS SP-46 engineering drawing standard.

(b) The figure no. 2 shows the pictorial view of the object. Draw the front view, top view and and left hand side view using first angle method of projection. **10**

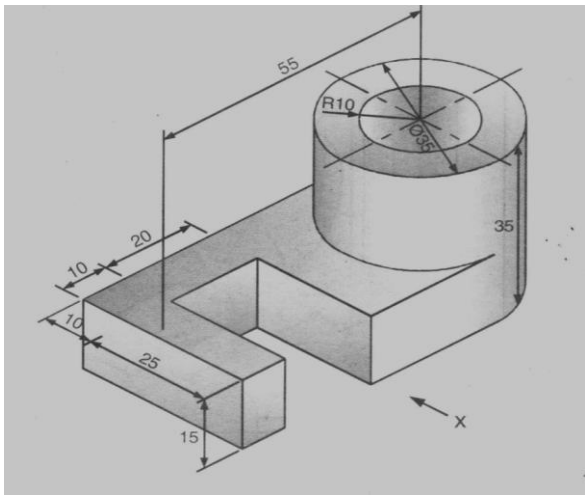

figure no. 2