Seat No.: _____ **Enrolment No._____**

GUJARAT TECHNOLOGICAL UNIVERSITY

BE - SEMESTER–V (OLD) - EXAMINATION – SUMMER 2017

Subject Code: 150103 **Date: 01/05/2017**

Subject Name: Aircraft Structure-II

Time: 02:30 PM to 05:00 PM **Total Marks: 70**

Instructions:

1. **Attempt all questions.**
2. **Make suitable assumptions wherever necessary.**
3. **Figures to the right indicate full marks.**

Q.1	**(a)**	State the difference between strain energy and complimentary strain energy.	**03**
	(b)	Prove that, flexibility and stiffness are inversely proportional to each other.	**05**
	(C)	Suggest different way of making the section free from torsion along with suitable justification.	**03**
Q.2	**(a)**	Analyze the beam as shown in fig.1 using Stiffness Matrix Method. Take E = 210 x 10^3 N/mm^2 and I = 2.2 x 10^8 mm^4.	**07**
	(b)	Find the support reaction for a Frame as shown in fig.2 using Stiffness Matrix Method if the rotation at joint 'B' is 0.000060 rad clockwise. Neglect the axial deformation in the member. Take E = 200 x 10^3 N/mm^2 and I = 80 x 10^3 mm^4.	**07**
		OR	
	(b)	Obtain the global stiffness matrix for a single truss member by showing proper derivation.	**07**
Q.3	**(a)**	State the difference between Stiffness and Flexibility Methods of Structural Analysis.	**04**
	(b)	A 5 m long simply supported beam is subjected to a u.d.l. of 12 kN/m intensity throughout the length of a beam. Find the support reaction using Flexibility Matrix Method.	**10**
		OR	
Q.3	**(a)**	Enlist the properties of Stiffness Matrix.	**04**
	(b)	Find the support reaction for a frame as shown in fig.-3 using Flexibility Matrix Method.	**10**
Q.4	**(a)**	State the difference between symmetrical and Unsymmetrical Bending.	**04**
	(b)	Locate the Shear Centre of a section as shown in fig.-4. Also draw the shear flow and shear stress distribution diagram.	**10**
		OR	
Q.4	**(a)**	Derive the equation to locate the Neutral Axis of the section subjected to unsymmetrical bending.	**07**
	(b)	At a point in a body subjected to a three dimensional forces, the state of stress is define as σ_{xx} = 200 N/mm^2, σ_{yy} = -100 N/mm^2 , σ_{zz} = -100 N/mm^2 and the shear stresses T_{xy}= T_{yz}= T_{zx}= 200 N/mm^2. Compute the normal, Shearing and Resultant stresses on a plane that is equally inclined to all the three principal axes.	**07**
Q.5	**(a)**	Derive an equation of a Castiglione's force theorem F = $\partial U/\partial \Delta$ with usual notation.	**07**
	(b)	Find the internal forces in a truss member as shown in Fig.-5 using Castiglione's theorem. All the members have same cross sectional areas.	**07**
		OR	
Q.5	**(a)**	Explain Theorem of least work. Explain its application in structural analysis by giving suitable example.	**07**

(b) For a truss as shown in fig.-6, determine the horizontal deflection at point 'B' using any suitable method. Take A = 0.001 m^2, E= 2 x 10^5 N/m^2. **07**

****

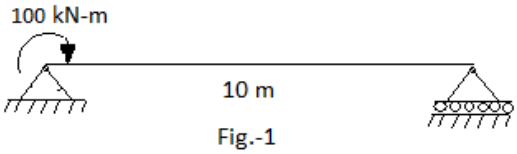

Fig.-1

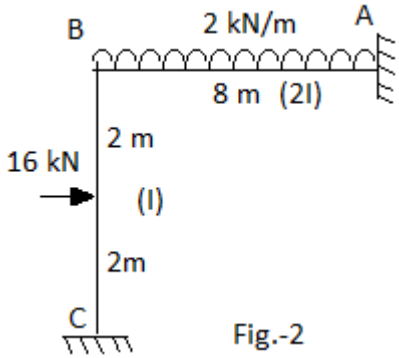

Fig.-2

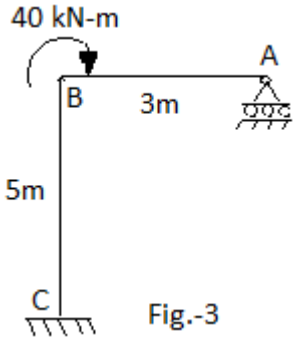

Fig.-3

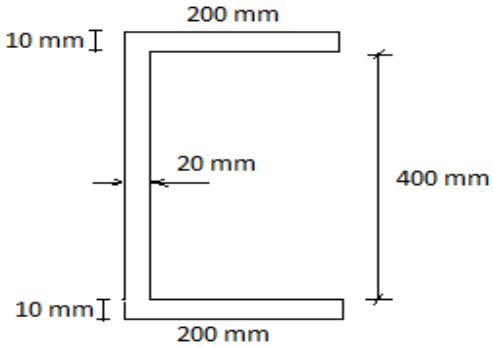

Fig-4

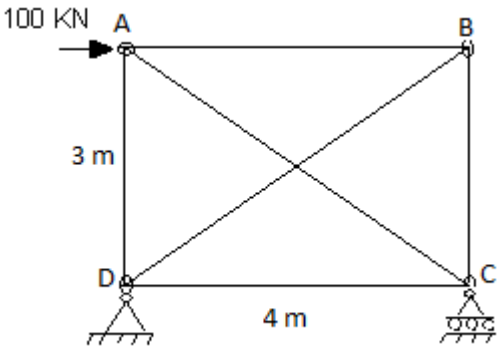

Fig.-5

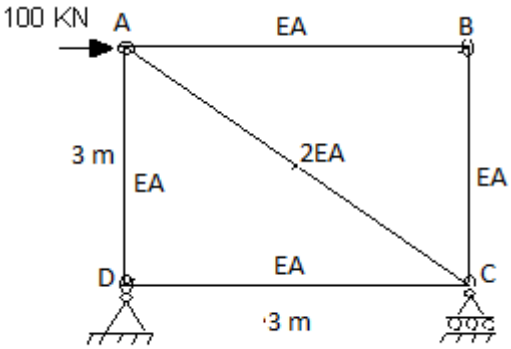

Fig.-6