Seat No.: _____ **Enrolment No._____**

GUJARAT TECHNOLOGICAL UNIVERSITY

BE - SEMESTER–V (OLD) - EXAMINATION – SUMMER 2017

Subject Code: 150605 **Date: 05/05/2017**

Subject Name: Structural Analysis - III

Time: 02:30 PM to 05:00 PM **Total Marks: 70**

Instructions:

1. **Attempt all questions.**
2. **Make suitable assumptions wherever necessary.**
3. **Figures to the right indicate full marks.**

Q.1	**(a)**	Determine the support reactions at B & C of a beam as shown in fig.1 by flexibility method, if support B sinks by 25 mm. Take EI = 3800 kN-m^2	**07**
	(b)	Determine the support moments of a beam as shown in fig.2 by Stiffness method. Take EI = constant	**07**
Q.2	**(a)**	Explain technical aspects of difference between curved beam and usual beam.	**07**
	(b)	Determine the support reactions at C of a frame as shown in fig.3 by flexibility method. Take EI = constant	**07**
		OR	
	(b)	Explain type of domes with neat sketches and state their uses.	**07**
Q.3	**(a)**	Two wooden strips of 40 mm width x 200 mm length are placed in such a way that it forms a shape of PLUS sign. Determine shape factor.	**07**
	(b)	Find collapse load of fixed beam having length "L" and subjected to central Point load "W" by static method and kinematic method.	**07**
		OR	
Q.3	**(a)**	Find the shape factor of T-section having flange dimensions 120 mm x 10 mm and web dimensions 150 mm x 10 mm.	**07**
	(b)	Find collapse load of fixed beam having length "L" and subjected to point load "W" acting at a distance "a" from left support and distance "b" from right support by static method and kinematic method.	**07**
Q.4	**(a)**	Find the deflection at free end of quarter circular beam in plan, if it is loaded by point load "W" at mid span, acting vertically downward.	**07**
	(b)	A beam circular in plan has radius of 8 m and is supported at equally spaced 8 columns. It is loaded by UDL of 40 kN/m. Calculate the maximum values of bending moment, shear force and torsional moment.	**07**
		OR	
Q.4	**(a)**	A beam quarter circular in plan with both end fixed has radius of 5m. The beam carries a udl of 30 kN/m. Draw shear force diagram. Take GJ = 0.8EI	**07**
	(b)	For the above problem 4(a)OR, draw bending moment and twisting moment diagrams.	**07**
Q.5	**(a)**	Derive an expression for Meridional stress and Hoop stress develop in a spherical dome subjected to concentrated load "W" at crown.	**07**
	(b)	A conical dome of 100mm thick and 3.5m rise is to be used to cover a hall of 20m diameter. The live load of 2kN/m^2 is acting over the dome surface. Calculate meridional stress and hoop stress at the base of Dome. Density of concrete is 25kN/m^3.	**07**
		OR	

Q.5 **(a)** Explain with neat sketches the various mechanism of failure of plane frames in plastic analysis. **07**

(b) A spherical dome has 6 m span and 1.25 m rise. It is subjected to load of 600 N/m^2, including self weight and a lantern load of 800 N at crown. Take thickness as 150 mm. Assume live load 1.2 kN/m^2 **07**

****

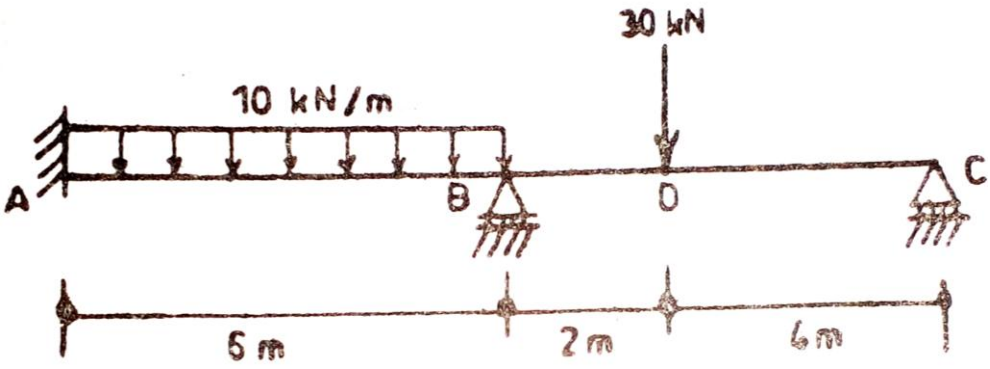

Fig.1 Q.1 (a)

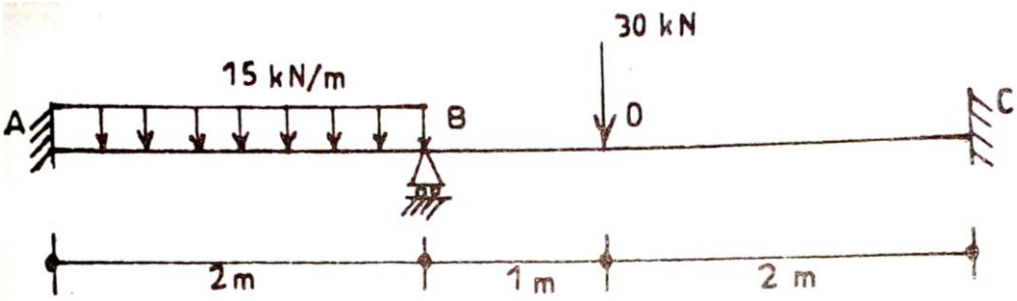

Fig.2 Q.1 (b)

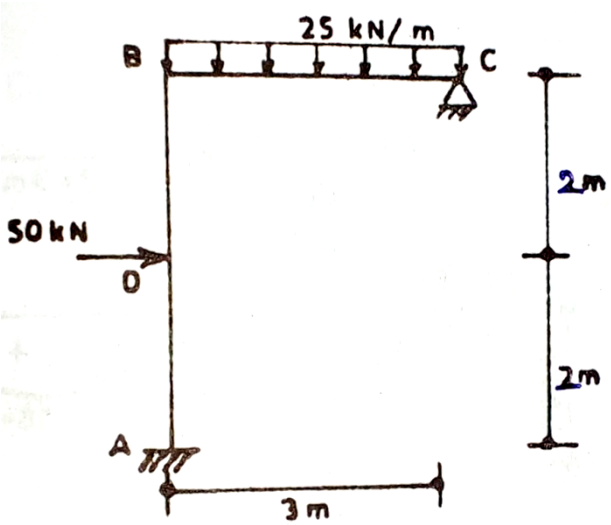

Fig.3 Q.2 (b)