Seat No.: _____ **Enrolment No._____**

GUJARAT TECHNOLOGICAL UNIVERSITY

BE - SEMESTER–V (OLD) - EXAMINATION – SUMMER 2017

Subject Code: 152504 **Date: 27/04/2017**

Subject Name: Dynamics of Machines & Production Engineering Drawing

Time: 02:30 PM to 05:00 PM **Total Marks: 70**

Instructions:

1. **Attempt all questions.**
2. **Make suitable assumptions wherever necessary.**
3. **Figures to the right indicate full marks.**

Q.1	**(a)**	Derive expressions for displacement, velocity and acceleration of piston in a reciprocating engine. Assume notations as: r = radius of crank, l = length of connecting rod, n = l/r, θ = angle turned through by crank from IDC, ω = angular velocity of crank.	**07**
	(b)	A, B, C and D are four masses carried by a rotating shaft at radii 100, 125, 200 and 150 mm respectively. The planes in which the masses revolve are spaced 600 mm apart and the mass of B, C and D are 10 kg, 5 kg, and 4 kg respectively. Find the required mass A and the relative angular settings of the four masses so that the shaft shall be in complete balance	**07**
Q.2	**(a)**	Derive an expression for the frequency of free torsional vibrations for a shaft fixed at one end and carrying a load on the free end.	**07**
	(b)	A vibrating system consists of a mass of 50 Kg, a spring of stiffness 30 KN/m and a damper. The damping provided is only 20% of the critical value. Determine: (i) the damping factor (ii) the critical damping coefficient (iii) the natural frequency of damped vibrations (iv) the logarithmic decrement (vi) the ratio of two consecutive amplitudes.	**07**
		OR	
	(b)	Explain the term 'whirling speed' or 'critical speed' of a shaft. Prove that the whirling speed for a rotating shaft is the same as the frequency of natural transverse vibration.	**07**
Q.3	**(a)**	What is the function of a flywheel? Explain the turning moment diagram of a four stroke cycle internal combustion engine.	**07**
	(b)	State and explain D'Alembert's principle. What is meant by Equivalent offset inertia force?	**07**
		OR	
Q.3	**(a)**	Describe a three rotor vibratory system & find the ratio of their amplitudes.	**07**
	(b)	Why reciprocating masses are partially balanced? Explain any ONE effect of partial balancing in locomotives.	**07**
Q.4	**(a)**	Draw the following geometrical symbols (i) straightness (ii) flatness (iii) circularity and (iv) cylindricity	**07**
	(b)	Classify assembly drawings according to their uses and briefly explain each of them.	**07**
		OR	
Q.4	**(a)**	Where foundation bolts are used? Draw any THREE foundation bolts.	**07**
	(b)	A shaft 50 mm diameter and 3 meters long is simply supported at the ends and carries three loads of 1000 N, 1500 N and 750 N at 1 m, 2 m and 2.5 m from the left support. The Young's modulus for shaft material is 200 GN/m^2. Find the frequency of transverse vibration.	**07**
Q.5	**(a)**	Figure 1 shows two views of an object. Draw Sectional front view and top view and one side view of the object.	**07**

(b) A vertical square prism, edge of base 45 mm and height 85 mm resting on its base in HP with a vertical face inclined at 60 ^{o} to the VP is penetrated by a horizontal square prism edge of base 35 mm and 90 mm long, having one of its rectangular faces inclined at 30° to VP. The axes of both the prisms bisect each other. Draw the projections showing lines of intersection. **07**

OR

Q.5 **(a)** A cylinder 50mm dia. and 70mm axis is completely penetrated by a triangular prism of 45 mm sides. and 70 mm axis, horizontally. One flat face of prism is parallel to VP and Contains axis of cylinder. Draw projections showing curves of intersections. **07**

(b) Draw any SEVEN welding symbols. **07**

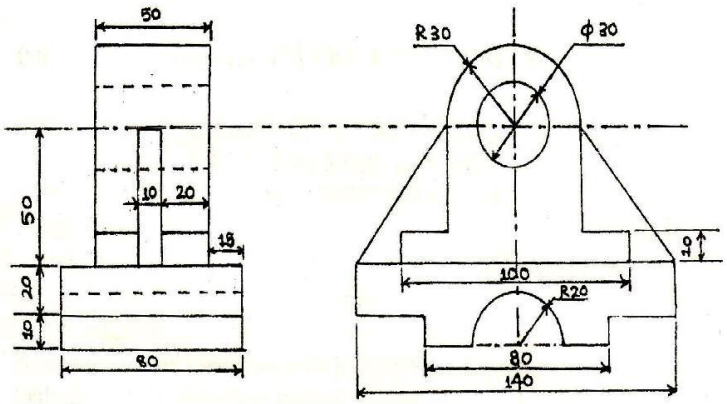

Figure 1