**Seat No.: _____** **Enrolment No._____**

# GUJARAT TECHNOLOGICAL UNIVERSITY

**BE - SEMESTER–VI (OLD) - EXAMINATION – SUMMER 2017**

**Subject Code: 160104** **Date: 05/05/2017**

**Subject Name: Basic Control Theory**

**Time: 10:30 AM to 01:00 PM** **Total Marks: 70**

**Instructions:**

1. **Attempt all questions.**
2. **Make suitable assumptions wherever necessary.**
3. **Figures to the right indicate full marks.**

**Q.1** **(a)** Compare following **07**

1. Open loop System and Closed loop system
2. Block diagram method and Signal flow graph

**(b)** Draw unit step response of a second order control systems. Describe all specifications in detail. **07**

**Q.2** **(a)** What is analogous system? Establish Force – Voltage and Force – Current analogy. **07**

**(b)** Obtain the transfer function C/R from the signal flow graph as shown in below figure. **07**

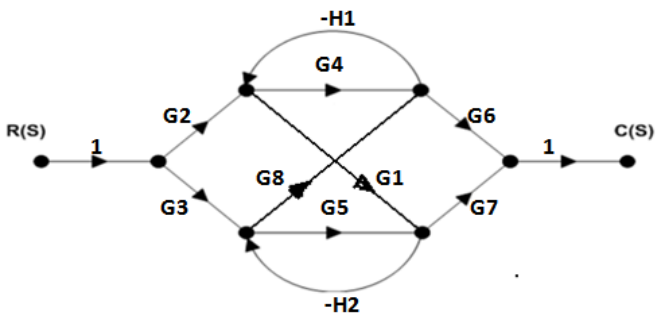


**OR**

**(b)** Explain the rules for block diagram reduction method. **07**

**Q.3** **(a)** What is meant by order & type of systems? What are position, velocity and acceleration error constant? Explain the performance of type 0 system of step input. **07**

**(b)** Derive the unit step response of the first order system. **07**

**OR**

**Q.3** **(a)** The characteristic equation of a feedback system is **07**
$F(s) = s^6+2s^5+8s^4+12s^3+20s^2+16s+16$ Using the Routh's Hurwitz criterion determine the stability of the system.

**(b)** **07**

**Q.4** **(a)** Which two plots constitute Bode plot? What steps are followed to sketch Bode plot? What are frequency response specifications? Explain with the help of diagrams. **07**

**(b)** Draw the Root Locus diagram for a closed loop system whose loop transfer function is given by, $G(s)H(s)= K/s\ (s+5)(s+10)$. Comment on the stability. **07**

**OR**

**Q.4** **(a)** Explain steps for plotting root locus. **07**

**(b)** Sketch bode plot for the following system and find gain margin, phase margin, gain crossover frequency and phase crossover frequency. **07**

$G(s)= 4(s+0.5)/s(s+0.2)(s+1)$

| | | | |
|---|---|---|---|
| **Q.5** | **(a)** | Comparison between Modern Control Theory and Conventional Control Theory. | **07** |
| | **(b)** | Explain the following terms: State, State Variables and State models. | **07** |

**OR**

| | | | |
|---|---|---|---|
| **Q.5** | **(a)** | Obtain polar plot of $G(s)=1/[s(T_1s+1)(T_2s+1)]$. | **07** |
| | **(b)** | Obtain state space model for the single input and single output system with necessary dimension of matrices. Define state transition matrix using equation. State its properties. | **07** |

**********