Seat No.: _____ **Enrolment No._____**

GUJARAT TECHNOLOGICAL UNIVERSITY

BE - SEMESTER–VI (OLD) - EXAMINATION – SUMMER 2017

Subject Code: 160304 **Date: 03/05/2017**

Subject Name: Bio-Medical Control Theory

Time: 10:30 AM to 01:00 PM **Total Marks: 70**

Instructions:

1. **Attempt all questions.**
2. **Make suitable assumptions wherever necessary.**
3. **Figures to the right indicate full marks.**

Q.1 **(a)** Define control system. Draw and explain open loop and closed loop system with two examples of each. 07

(b) What do you mean by Under-damped and Over-damped system? 02

(c) 1) Root locus method is Time Domain Method? True/False. 05
2) State Nyquist Stability Criterion.
3) Write Mason's Gain Formula.

Q.2 **(a)** Define the following terms: 07
a) Transfer Function, b) Order of the system, c) Transportation Lag,
d) State, e) Chain Node, f) Self-Loop, g) Transfer-Matrix.

(b) Derive force-voltage analogy. 07

OR

(b) Derive the Transfer Function of an Armature controlled d.c. motor 07

Q.3 **(a)** Write short note on Standard Test Inputs. 07

(b) Derive an equation of unit step response of a second order system for an Under-damped case. 07

OR

Q.3 **(a)** Explain missile guidance and launching system with neat sketch and related explanation. 07

(b) Obtain transfer function for the given system by using block reduction technique 07

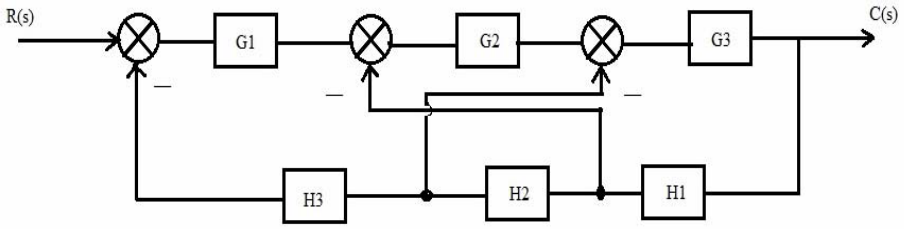

Q.4 **(a)** Obtain transfer function for the given signal flow graph. 07

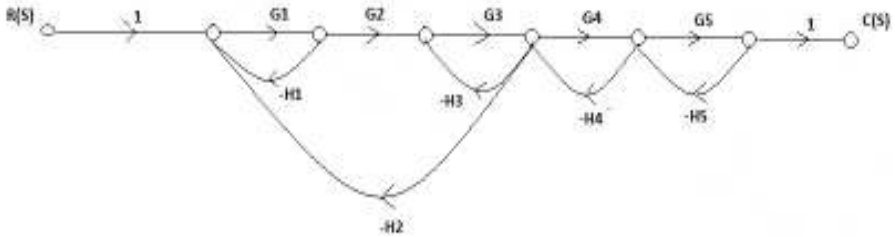

(b) The characteristics equation of feedback control system is 07

$s^4+20s^3+15s^2+2s+K=0.$

(i) Determine range of K for system stability.

(ii) Can the system be marginally stable? If so,

(iii) Find the required value of K and frequency of sustained oscillations.

OR

Q.4 **(a)** Consider the liquid level system shown in figure 1. The inflow and outflow rate are Q at steady state and flow rate between the tanks is zero. The heads of both tanks are at H. 07

At t = 0, the inflow rate is slightly changed to Q + q. The resulting changes in the heads h1 and h2 as well as flow rates q1 and q2 are assumed to be small. The capacitance of tank 1 & 2 are C1 and C2 respectively. The R1 is the resistance of the valve between both tanks while R2 is the resistance of the outflow valve. Design the mathematical model for q input and h2 output.

(b) $s^6+2s^5+8s^4+12s^3+20s^2+16s+16=0,$ Check the stability of the given characteristic equation using Routh's method. 07

Q.5 **(a)** Sketch the root locus for the system having 10

$G(s)*H(s) = K / s (s^2+2s+2).$ Comment on stability.

(b) Obtain a state-space equation and output equation for the system defined by 04

$$\frac{Y(s)}{U(s)} = \frac{10.4s^2 + 47s + 160}{s^3 + 14s^2 + 56s + 160}$$

OR

Q.5 **(a)** Sketch the bode plot for the system having 07

$G(s)*H(s) = 10/ s (1+0.1s)^2.$ Comment on stability.

(b) Sketch the Nyquist plot of a given transfer function 07

$G(s)*H(s) = 1/s^3 (s+1).$ Comment on stability.

Figure: 1.
(OR) Q. 4 (a)

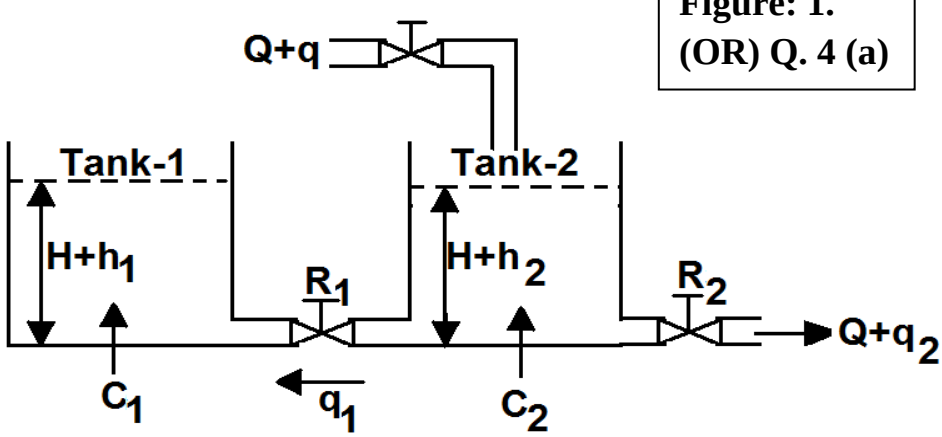

****