Seat No.: _____ **Enrolment No._____**

GUJARAT TECHNOLOGICAL UNIVERSITY

BE - SEMESTER–VI (OLD) - EXAMINATION – SUMMER 2017

Subject Code: 161905 **Date: 01/05/2017**

Subject Name: Control Engineering

Time: 10:30 AM to 01:00 PM **Total Marks: 70**

Instructions:

1. **Attempt all questions.**
2. **Make suitable assumptions wherever necessary.**
3. **Figures to the right indicate full marks.**

Q.1 **(a)** What are the advantages and disadvantages of open loop and closed loop systems? Explain with suitable examples. **07**

(b) Define transfer function of a linear time invariant control system and hence discuss its properties. Also discuss the role of Laplace Transforms in system analysis. **07**

Q.2 **(a)** List the basic types of control actions and explain the PID control action in detail with response plots. **07**

(b) Obtain transfer function Y(S) /R(S) of the system as shown in figure. **07**

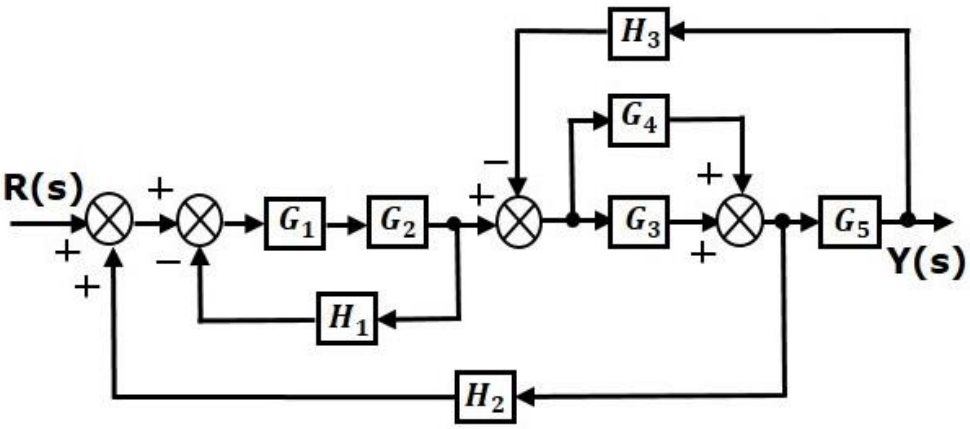

OR

(b) What is signal flow graph ? Write the steps for solving signal flow graph using Mason's gain formula. **07**

Q.3 **(a)** Determine the stability of $2s^6+2s^5+3s^4+3s^3+2s^2+s+1=0$ **07**

(b) Draw a neat sketch of Hydraulic Crane. Describe component and working of hydraulic crane. **07**

OR

Q.3 **(a)** With the help of fundamental differential equations draw the basic block diagram and hence derive the transfer function for a Armature controlled DC motor **07**

(b) With the help of a neat sketch explain the working of a pneumatic nozzle flapper amplifier and hence determine its transfer function **07**

Q.4 **(a)** Sketch the root locus plot of the system with **07**

$G(s)\,H(s) = K\,(s+2)\,(s+3)\,/\,(s^2-1)$

(b) Define programmable logic controller. What are the components of PLC? State the Advantages & Disadvantages of it. **07**

OR

Q.4	**(a)**	Explain different types of pneumatic valves.	**07**
	(b)	A RC circuit is tested with unit-step input signal. Derive the unit-step response and plot the unit-step response curve for the same. Comment on the unit-step response in the light of transient response and steady-state response.	**07**
Q.5	**(a)**	What do you mean by micro-processor based digital control	**07**
	(b)	Define fuzzy logic. Explain the concept of Fuzzy logic with a suitable example.	**07**

OR

Q.5	**(a)**	Draw equivalent mechanical and electrical systems to relate force voltage or force current analogy.	**07**
	(b)	Explain boiler feed control system using neat sketch.	**07**

****