Seat No.: _____ **Enrolment No._____**

GUJARAT TECHNOLOGICAL UNIVERSITY

BE - SEMESTER–VII (OLD) - EXAMINATION – SUMMER 2017

Subject Code: 171905 **Date: 29/04/2017**

Subject Name: Industrial Tribology (Department Elective - I)

Time: 02:30 PM to 05:00 PM **Total Marks: 70**

Instructions:

1. **Attempt all questions.**
2. **Make suitable assumptions wherever necessary.**
3. **Figures to the right indicate full marks.**

Q.1 **(a)** Derive Reynold's equation for 3-D hydrodynamic lubrication. Also state the assumptions made in this derivation. **07**

(b) A 360^0 hydrodynamic bearing has the following data for centrifugal pump application: **07**

Journal diameter = 100 mm Bearing material - Babbit

Radial load = 20 kN Journal speed = 900 r.p.m.

Operating temp of oil = 55^0 C Ambient temp of oil = 15.5^0 C

Type of oil SAE10 ,has the absolute viscosity at 55^0 C = 0.017 kg/m-sec

Rise in temperature of oil is limited to 10^0 C

Permissible bearing pressure = 1.5 MPa

Heat dissipation coefficient of oil = 1232 W/ m^2/ ^{0} C

Value of $(ZN / p)_{min} = 28$ Correction factor for end leakage = 0.002

Ratio c / d = 0.0013

Find the length of the bearing and mass of the lubricating oil to be circulated for artificial cooling.

Q.2 **(a)** Explain the different methods used for friction /wear measurement. **07**

(b) Define and explain: viscosity, viscosity index, absolute viscosity, kinematic viscosity and bearing modulus. **07**

OR

(b) Classify the lubricants. Explain the parameters to be considered while selecting suitable lubricant. **07**

Q.3 **(a)** How does hydro-dynamic lubrication differ from hydro-static lubrication? Explain this in detail. **07**

(b) Discuss the geometrical properties of the surface. Also discuss parameters of measurements of roughness of the surface. **07**

OR

Q.3 **(a)** Explain the optimum design of hydrostatic step bearing in detail. **07**

(b) The hydrostatic thrust bearing (circular type) of a generator consists of six pads has the following data(refer given fig): **07**

Total thrust load = 600 kN Shaft diameter = 500 mm

Viscosity of the lubricant = 30 cP Recess diameter =200 mm

Shaft speed =720 r.p.m. Density of the lubricant = 900 kg/m^3

Specific heat of lubricant = 2.09 kJ/kg ^{0}c

Oil film thickness = 0.15 mm

Neglecting the flow over corners and each pad can be approximated as circular area of outer and inner diameters, Find (i) supply pressure (ii) total power loss.

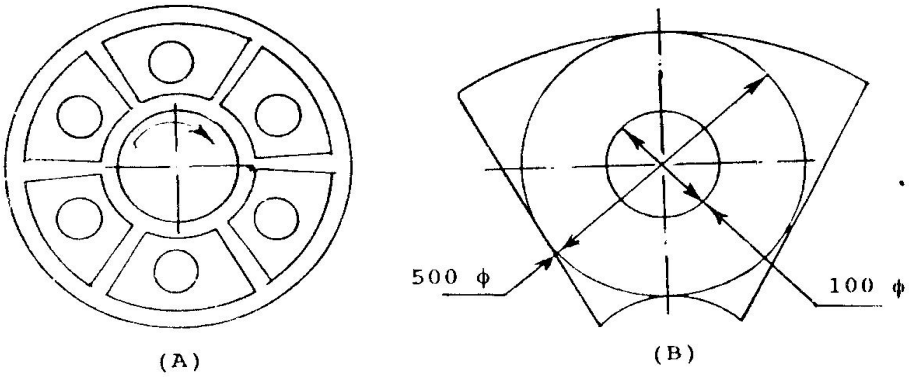

Fig. (a) Six-pad bearing, (b) Dimensions of each pad

Q.4	**(a)**	Explain the recycling of used oils in detail.	**07**
	(b)	Explain the air/gas bearing in detail with neat sketch.	**07**
		OR	
Q.4	**(a)**	Explain the different regimes of hydrodynamic lubrication with the help of plot of coefficient of friction v/s bearing characteristic number.	**07**
	(b)	Explain the diagnostic maintenance of tribological components and considerations in IC engines and automobile parts.	**07**
Q.5	**(a)**	Write a detailed note on: EHD (elasto hydrodynamic) lubrication and its different examples.	**07**
	(b)	State and explain the factors to be considered while selecting suitable rolling contact bearing.	**07**
		OR	
Q.5	**(a)**	State the different theories of friction. Explain the junction growth theory with the neat sketch.	**07**
	(b)	Explain the bearing materials and its properties in detail.	**07**

****