Seat No.: _____ **Enrolment No._____**

GUJARAT TECHNOLOGICAL UNIVERSITY

BE - SEMESTER–VIII (old) - EXAMINATION – SUMMER 2017

Subject Code:181702 **Date:29/04/2017**

Subject Name: Motion Control

Time:10:30 AM to 01:00 PM **Total Marks: 70**

Instructions:

1. **Attempt all questions.**
2. **Make suitable assumptions wherever necessary.**
3. **Figures to the right indicate full marks.**

Q.1 **(a)** Draw and describe block diagram of Incremental Motion system. Justify the need of position sensors. **07**

(b) Obtain $\theta_2(t)$ for following Incremental feedback control system shown in figure (1) by considering $\theta_1=1$ for $t>0$ and initial condition zero. **07**

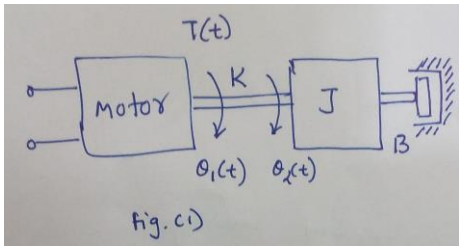

Q.2 **(a)** Explain the working of potentiometer as error detector in position servo system with logical justification. **07**

(b) Obtain Transfer function r(t) to θ_m (t) for following Incremental feedback control system shown in figure (2). **07**

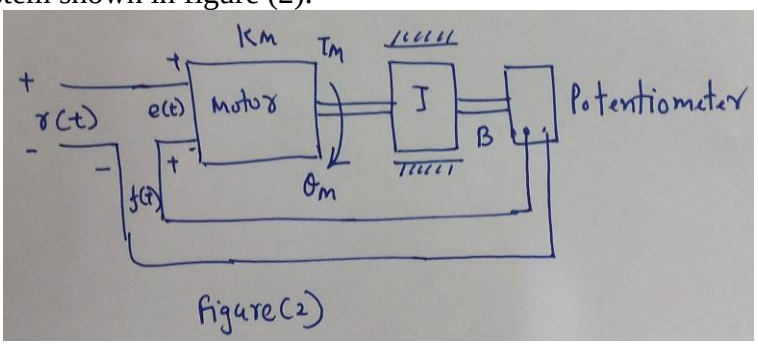

OR

(b) Discuss the reasons which make DC Motor as popular Incremental Motion control actuator? Compare its operation with step motor. **07**

Q.3 **(a)** Obtain transfer function $\Omega_1(s)/T_g(s)$ of three body structure. Draw pole-zero representation of three body structure. **07**

(b) Draw and describe the function of bipolar PWM Amplifier.

OR

Q.3 **(a)** Explain Torsional Resonance? How it will be eliminated from Motion control system? Describe it with proper explanation. **07**

(b) Describe the working of Phase locked servo system with block diagram for continues phase detection. **07**

Q.4 **(a)** Explain any two electrical step motor in details **07**
(i) Variable reluctance Step Motor (ii) Permanent magnet Step Motor (iii) Hybrid Step Motor.

(b) How will the stability of Position control system without velocity feedback improved? Give engineering notes on it. **07**

OR

Q.4	**(a)**	List the types of step motor and explain its at least five performance characteristic.	**07**
	(b)	Discuss the need of drive circuit for stem motor. Draw and describe Bidirectional 4 phase logic circuit.	**07**
Q.5	**(a)**	Explain Power drive requirement in Step motor drive. Draw and describe bipolar driver circuit for 4 phase PM step Motor.	**07**
	(b)	Make proper step motor selection by considering its all aspects in motion control application.	**07**

OR

Q.5	**(a)**	How will encoder useful to make closed loop control system for Step motor? Describe it in details.	**07**
	(b)	Explain the block diagram of step motor speed controller using time delay.	**07**

****