Seat No.: _____ **Enrolment No._____**

GUJARAT TECHNOLOGICAL UNIVERSITY

BE - SEMESTER–IV (NEW) - EXAMINATION – SUMMER 2017

Subject Code: 2141002 **Date: 30/05/2017**

Subject Name: Analog Circuit Design

Time: 10:30 AM to 01:00 PM **Total Marks: 70**

Instructions:

1. **Attempt all questions.**
2. **Make suitable assumptions wherever necessary.**
3. **Figures to the right indicate full marks.**

			MARKS
Q.1		**Short Questions**	**14**
	1	Explain the behavior of transistor at high frequency.	
	2	Which Amplifier is often used to drive capacitive loads.	
	3	What is the suitable frequency range for wein bridge oscillator?	
	4	What is differential amplifier? How it is different from conventional amplifier?	
	5	Which type of negative feedback is present in inverting configuration?	
	6	Explain procedure of offset-nulling in op-amp.	
	7	Explain any one application of I-V converter in brief.	
	8	How op-amp is used as a summing amplifier?	
	9	Enlist the applications of comparator and explain PLD.	
	10	What is multivibretor? Classify different multivibretors.	
	11	Define and explain the 'Lock range' and 'Capture range'.	
	12	What is the difference between shunt and series regulator?	
	13	Explain the necessaity of high order filters.	
	14	What is the difference between active and passive filters?	
Q.2	**(a)**	Explain Barkhausen criterion for oscillation in brief.	**03**
	(b)	Design RC phase oscillator for the frequency of 2 KHz.	**04**
	(c)	Draw op-amp based wein bridge oscillator. Obtain frequency of oscillation and discuss amplitude stabilization for same.	**07**
		OR	
	(c)	Derive the expression for the frequency for the RC phase shift oscillator using transistor.	**07**
Q.3	**(a)**	A Hartley oscillator circuit has a tank circuit inductance of $L_1=L_2=100\mu H$. It is required to produce oscillations at 50 KHz. Obtain the exact value of the tank circuit capacitance for the above requirement.	**03**
	(b)	State the relation between hybrid-Π and h-parameters.	**04**
	(c)	Draw and explain with necessary figure the single stage CE amplifier response. Also explain the significance of GB product.	**07**
		OR	
Q.3	**(a)**	Derive the necessary equation of gain for All pass filter.	**03**
	(b)	Design on Op-Amp Schmitt trigger with LTP = 2V, UTP = 4V and Vsat= ±10 V.	**04**
	(c)	Draw circuit diagram of differential amplifier with three op-amps and derive expression for its output signal as a function of input signals.	**07**
Q.4	**(a)**	Define PSRR of an op-amp. If PSRR of an op-amp is 150µv/v and supply voltage changes from +10v to +12v, what is the change in V_{io}.	**03**
	(b)	An op-amp as inverting amplifier is driven by 10 V peak to peak sine	**04**

wave. Supply voltage of op-amp is +/- 15V. Draw input and output waveforms and give your comments.

(c) Prove that output is integral function of Input. **07**

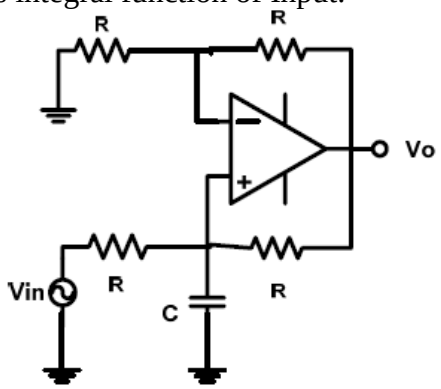

OR

Q.4 **(a)** Define the following. (i) CMRR (ii) Slew Rate (iii) Offset voltage. **03**

(b) Draw and explain working of op-amp based Full wave rectifier circuit. **04**

(c) Explain voltage to current converter with floating load. Based on that show low voltage DC voltmeter circuit and discuss it. **07**

Q.5 **(a)** Discuss fixed and adjustable voltage regulator with necessary circuit diagrams. **03**

(b) For an astable multivibretor using 555 timer, R_A=4.7KΩ, R_B= 1KΩ and C=0.05µF, determine the positive pulse width, negative pulse width and free running frequency. **04**

(c) Design and explain the 2nd order low pass butterworth filter. Derive the equation of gain for the same. **07**

OR

Q.5 **(a)** Calculate output frequency fo, lock range and and capture range of a PLL if R_T=1KΩ, C_T=0.1µF and filter capacitor C=10 µF and V=20v. **03**

(b) Explain the magnitude and phase response of low pass function of biquad circuit. **04**

(c) Explain with the circuit diagram and waveforms, the monostable multivibretor using 555 timer. Design the same for output pulse width of 10ms. **07**

****