Seat No.: _____ **Enrolment No._____**

GUJARAT TECHNOLOGICAL UNIVERSITY

BE - SEMESTER–V (NEW) - EXAMINATION – SUMMER 2017

Subject Code: 2150909 **Date: 05/05/2017**

Subject Name: Control System Engineering

Time: 02:30 PM to 05:00 PM **Total Marks: 70**

Instructions:

1. **Attempt all questions.**
2. **Make suitable assumptions wherever necessary.**
3. **Figures to the right indicate full marks.**

			MARKS
Q.1		**Short Questions**	**14**
	1	Define open loop and close loop control system.	
	2	Write equation of mason gain formula.	
	3	How 'type' of the system can be defined?	
	4	Define transfer function.	
	5	Define proportional control.	
	6	Define frequency domain.	
	7	Define lead compensators and lag compensators.	
	8	Define term stability in context of control engineering.	
	9	Give approx value of damping factor in normal control system	
	10	Define signal flow graph.	
	11	Why do you use log scales on X-axis?	
	12	Write any two frequency domain specification.	
	13	Write any two time domain specification.	
	14	Write standard characteristic equation for 2nd order system.	
Q.2	**(a)**	Compare Open Loop versus Closed Loop control systems.	**03**
	(b)	Explain Standard Test Signals used in control system.	**04**
	(c)	Explain following terms with respect to second order system. Draw necessary diagrams. ▪ Delay Time ▪ Rise Time ▪ Peak Time ▪ Steady state error ▪ Settling Time	**07**
		OR	
	(c)	Prepare a mathematical model of a series R-C circuit connected to a DC supply. Obtain the transfer function between capacitor voltage and supply voltage.	**07**
Q.3	**(a)**	Explain with example the first order system.	**03**
	(b)	Explain types of the system and steady state error constants for the same.	**04**

(c) 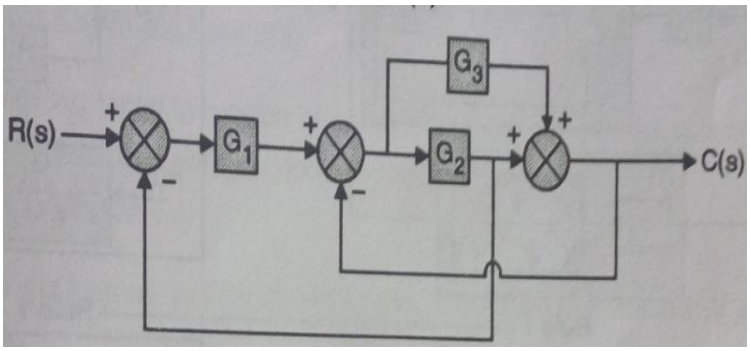
 07

Determine over all transfer function of the system using block diagram reduction technique.

OR

Q.3 **(a)** Define following terms. **03**

1) State variable 2) State trajectory 3) State vector

(b) Explain the effect of integral control action on system performance. **04**

(c) The close loop transfer function of a given second order system is $100/(S^2 +10S+100)$. **07**

Determine damping ratio, natural frequency, delay time, rise time, settling time and peak over shoot.

Q.4 **(a)** Write short note on "feedback control system" **03**

(b) Derive mathematical model of any mechanical system of your choice. **04**

(c) $S^6 +4S^5 +3S^4 -16S^2-64S-48=0$ Check the stability of the given charecteristic equation using Routh method. **07**

OR

Q.4 **(a)** Write short note on marginally stable system. **03**

(b) Explain the effect of derivative control action on system performance. **04**

(c) For unity feedback control system $G(s)= 800(S+2)/S^2(S+10)(S+40)$.Sketch the bode plot. **07**

Q.5 **(a)** Explain gain margin and phase margin. **03**

(b) Write the transfer function of second order unity feedback system for step response. Explain briefly each parameter of equation. **04**

(c) For unity feedback control system $G(s)= K/S(S+6)(S+9)$.Draw its root locus. **07**

OR

Q.5 **(a)** Write difference between state space analysis and transfer function. **03**

(b) Briefly explain about polar plots. **04**

(c) Explain in detail the Nyquist criteria to predict stability of system. **07**

****