Seat No.: _____ **Enrolment No._____**

GUJARAT TECHNOLOGICAL UNIVERSITY

BE - SEMESTER–V (NEW) - EXAMINATION – SUMMER 2017

Subject Code: 2151902 **Date: 12/05/2017**

Subject Name: Theory of Machines

Time: 02:30 PM to 05:00 PM **Total Marks: 70**

Instructions:

1. **Attempt all questions.**
2. **Make suitable assumptions wherever necessary.**
3. **Figures to the right indicate full marks.**

		Marks
Q-1	**Short Questions**	**14**
1	The gyroscopic effect due to rotating parts of a turbo jet engine of an air craft on a curved course depend on (a) Flight velocity (b) flight altitude (c) radius of curve (d) Flight velocity and radius of curve	
2	The axis of spin, the axis of precession, axis of applied gyroscope couple are contained in (a) One plane (b) two plane (c) three planes perpendicular to one another	
3	The rotor of a ship rotates in clockwise direction when viewed from the stern and the ship takes a left turn. The effect of the gyroscopic couple acting on it will be (a) to raise the bow and stern (b) to lower the bow and stern (c) to raise the bow and lower the stern (d) to lower the bow and raise the stern	
4	If the angle of the cyclist with normal increases the cyclist should have (a) Higher speed (b) same speed as before (c) lower speed	
5	Write the conditions for a dynamically equivalent system.	
6	When brakes are applied to all the four wheels of a moving car, the distance travelled by the car before it is brought to rest, will be (a) maximum (b) minimum (c) zero	
7	Which of the following is an absorption type dynamometer? (a) prony brake dynamometer (b) epicyclic-train dynamometer (c) torsion dynamometer	
8	The ratio of the maximum fluctuation of speed to the mean speed is called (a) fluctuation of speed (b) maximum fluctuation of speed (c) coefficient of fluctuation of speed (d) none of these	
9	The ratio of the maximum fluctuation of energy to _____ the, is called coefficient of fluctuation of energy. (a) minimum fluctuation of energy (b) work done per cycle	
10	The angle of inclination of the plane, at which the body begins to move down the plane, is called (a) angle of friction (b) angle of repose (c) angle of projection	
11	In a screw jack, the effort required to lift the load W is given by (a) $P = W \tan(\alpha - \varphi)$ (b) $P = W \tan(\alpha + \varphi)$ (c) $P = W \cos(\alpha - \varphi)$ (d) $P = W \cos(\alpha + \varphi)$	
12	The frictional torque transmitted by a disc or plate clutch is same as that of (a) flat pivot bearing (b) flat collar bearing (c) conical pivot bearing (d) trapezoidal pivot bearing	
13	The frictional torque transmitted by a cone clutch is same as that of (a) flat pivot bearing (b) flat collar bearing (c) conical pivot bearing (d) trapezoidal pivot bearing	
14	Draw the turning moment diagram of a single cylinder double acting steam engine.	

Q.2 **(a)** Explain following **04**

1. Sensitiveness of Governors
2. Isochronous Governors

(b) How stability of four wheels automobile is affected due Gyroscopic couple and centrifugal force. Explain with necessary expression. **04**

(c) Each road wheel of a motor cycle has a mass moment of inertia 1.5 kg-m2. The rotating parts of the engine of a motor cycle have a mass moment of inertia of 0.25 kg-m2. The speed of the engine is 5 times the speed of the wheels and is in the same sense. The mass of motor cycle with the rider is 250 kg and the centre of gravity is 0.6 m above the ground level. Find the angle of heel if motor cycle is travelling at 50 km per hour and is taking turn of 30 m radius. Wheel diameter is 0.6 m. **06**

OR

(c) The turbine rotor of a ship having a mass 0f 200 kg rotates at 2000 rpm and its radius of gyration is 0.30 m. if the rotation of rotor is clockwise looking from the aft, determine the gyroscopic couple set by the rotor when **06**

1. Ship takes left turn at a radius of 300 meters at a speed of 30 km/hr,
2. Ship pitches with the bow rising at an angular velocity of 1 rad/sec and
3. Ship rolls at an angular velocity of 0.1 rad/sec

Q.3 **(a)** Derive the expression of maximum fluctuation of energy for multi-cylinder engine and coefficient of fluctuation of energy. **06**

(b) A vertical single petrol engine 150 mm diameter and 200 mm stroke has a connecting rod 350 mm long. The mass of the piston is 1.6 kg and the engine speed is 1800 rpm. On the expansion stroke with crank angle 30° from top dead centre, the gas pressure 750 X 10^3 N/m^2. Determine the net thrust on the piston. **08**

OR

Q.3 **(a)** Derive an expression of fluctuation of energy for flywheel used in punching press. **06**

(b) The following data relate to a horizontal reciprocating engine: **08**

Mass of reciprocating part: 120 kg, crank length = 90 mm, engine speed = 600 rpm, mass = 90 kg, length between centres = 450 mm, distance of centre of mass from big end centre =180 mm, radius of gyration about an axis through centre of mass = 150 mm. determine.

1. Inertia torque due to reciprocating parts
2. Correction couple.

Q.4 **(a)** Determine the retardation of a four wheel car when the brakes are applied to the rear wheel. **04**

(b) Explain working of epicyclic train dynamometer. **03**

(b) A differential band brake, as shown in Fig. has an angle of contact of 225°. The band has a compressed woven lining and bears against a cast iron drum of 350 mm diameter. The brake is to sustain a torque of 350 N-m and the coefficient of friction between the band and the drum is 0.3. Find the necessary force (P) for the clockwise and anticlockwise rotation of the drum. **07**

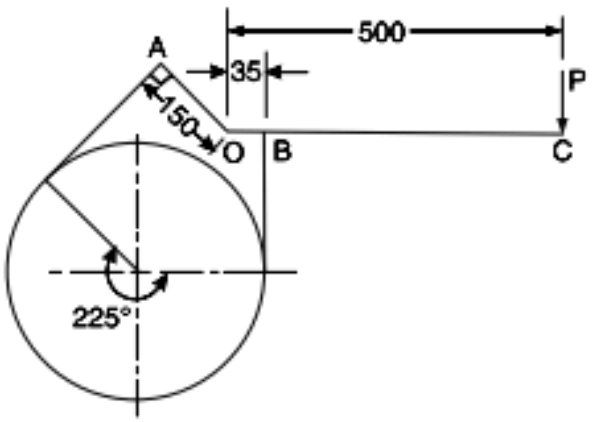

OR

Q.4 **(a)** Determine the retardation of a four wheel car when the brakes are applied to the front wheel. **04**

(b) Explain working of Bevis Gibson flash light torsion dynamometer. **03**

(b) A vehicle moving on a rough plane inclined at 10° with the horizontal at a speed of 36 km/h has a wheel base 1.8 metres. The centre of gravity of the vehicle is 0.8 metre from the rear wheels and 0.9 metre above the inclined plane. Find the distance travelled by the vehicle before coming to rest and the time taken to do so when 1. The vehicle moves up the plane, and 2. The vehicle moves down the plane. The brakes are applied to all the four wheels and the coefficient of friction is 0.5. **07**

Q.5 **(a)** Derive an expression of radius of gyration for connecting road. **05**

(b) Using graphical method determine the required value of T_2 and various forces on link for equilibrium of the system. **09**

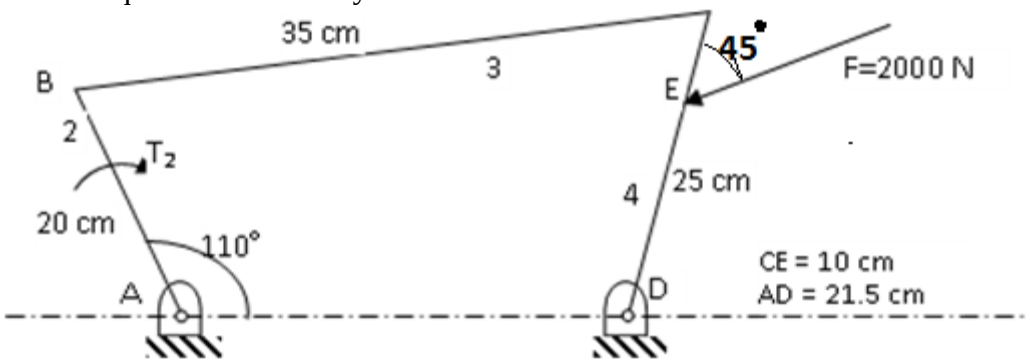

OR

Q.5 **(a)** Discuss the effect of friction on the forces acting at joints of mechanism. **05**

(b) Determine the magnitude and direction of the forces which must be applied to link 2 to maintain equilibrium. Neglect friction. O2A = 3 cm, AB = 7 cm, AC = 14 cm, BC = 8 cm. **09**