Seat No.: _____ **Enrolment No._____**

GUJARAT TECHNOLOGICAL UNIVERSITY

BE - SEMESTER–V (NEW) - EXAMINATION – SUMMER 2017

Subject Code: 2151908 **Date:10/05/2017**

Subject Name: Control Engineering

Time: 02:30 PM to 05:00 PM **Total Marks: 70**

Instructions:

1. **Attempt all questions.**
2. **Make suitable assumptions wherever necessary.**
3. **Figures to the right indicate full marks.**

Q.1		Short Questions	**14**
	(1)	Bread Toaster is an example of open-loop control system. (State TRUE or FALSE)	
	(2)	Automatic Washing Machine is an example of closed-loop control system. (State TRUE or FALSE)	
	(3)	What is 'Pole' of a Transfer Function?	
	(4)	Define Block diagram.	
	(5)	Give any TWO properties of Signal Flow Graph.	
	(6)	What do you mean by Time Response Analysis?	
	(7)	Define 'Stability' of a control system.	
	(8)	The time required for the transient damped oscillations to reach and stay within a specified tolerance band is known as _____ time.	
	(9)	List out any TWO limitations of Hurwitz criterion.	
	(10)	State any TWO disadvantages of Frequency Response Analysis.	
	(11)	Draw the block diagram of PID controller.	
	(12)	Give names of any TWO basic elements of hydraulic system.	
	(13)	What is the function of Pressure Relief Valve?	
	(14)	Draw the symbol of Variable Throttle Valve.	
Q.2	**(a)**	Discuss about the requirements of good control system.	**03**
	(b)	Derive the analogous relationship between Mechanical and Electrical systems based on Force-Voltage analogy.	**04**
	(c)	Obtain overall transfer function of the system whose block diagram is shown in Figure 1, explaining the major steps of reduction involved.	**07**
		OR	
	(c)	Obtain overall transmittance of the system whose signal flow graph is shown in Figure 2 by using Masson's gain formula.	**07**
Q.3	**(a)**	Derive the differential equation for the mechanical system shown in Figure 3.	**03**
	(b)	Explain about the transient and steady state response of the system. Also list out the standard test signals and explain any one of them.	**04**
	(c)	Obtain the transient response of first order system subjected to unity step input. Also draw the response curve of the same explaining the terms involved.	**07**
		OR	
Q.3	**(a)**	Discuss the effect of time constant on first order system response for unit step input.	**03**
	(b)	Explain the effect on steady state error when a step input applied to Type 0 systems.	**04**
	(c)	Define following terms in context with the transient response specifications of second order system using neat sketch: Delay time, Rise time, Peak time, Maximum overshoot, settling time	**07**

Q.4	**(a)**	Explain the ramp input mathematically and graphically.	**03**
	(b)	The overall transfer function of a control system is given by $\frac{C(s)}{R(s)} = \frac{1}{s^2 + s + 1}$. Determine the rise time, peak time and maximum overshoot.	**04**
	(c)	Using Routh criterion, discuss about the stability for the system having characteristics equation is given as $3s^7 + 9s^6 + 6s^5 + 4s^4 + 7s^3 + 8s^2 + 2s + 6 = 0$.	**07**

OR

Q.4	**(a)**	Check stability of the system whose characteristics equation is given as $s^3 + 8s^2 + 14s + 24 = 0$ by using Hurwitz criterion.	**03**
	(b)	Discuss about an On-Off control action type automatic industrial controller with differential gap.	**04**
	(c)	Draw the Root Locus diagram of a system with transfer function is $G(s)H(s) = \frac{K}{s(s^2 + 15s + 50)}$.	**07**
Q.5	**(a)**	List out the basic elements of a Pneumatic system.	**03**
	(b)	Describe with neat sketch of a pneumatic proportional controller.	**04**
	(c)	What do you mean by Frequency Response analysis? What are the methods used in frequency response analysis? Also state the advantages of the frequency response analysis.	**07**

OR

Q.5	**(a)**	State the advantages of State-space Analysis over conventional control system analysis methods.	**03**
	(b)	With the help of neat diagrams, explain how the direction control valves are classified.	**04**
	(c)	For series R-L-C circuit, obtain the state-space model.	**07**

****

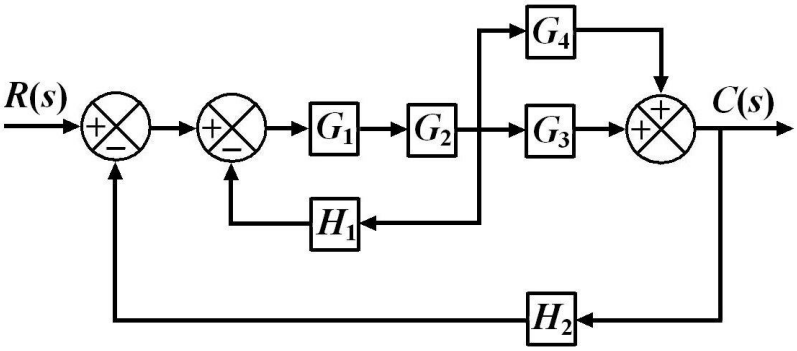

Figure 1, Q.2 (c)

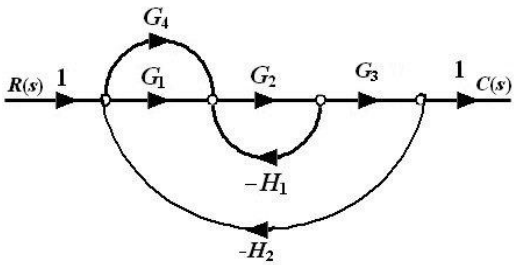

Figure 2, Q.2 (c) (OR)

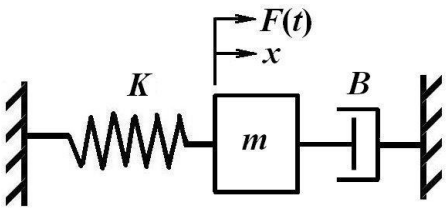

Figure 3, Q.3 (a)

****