Seat No.: _____ **Enrolment No._____**

GUJARAT TECHNOLOGICAL UNIVERSITY

BE - SEMESTER–V (NEW) - EXAMINATION – SUMMER 2017

Subject Code: 2152508 **Date:01/05/2017**

Subject Name: Design of Machine Element

Time:02:30 PM to 05:00 PM **Total Marks: 70**

Instructions:

1. **Attempt all questions.**
2. **Make suitable assumptions wherever necessary.**
3. **Figures to the right indicate full marks.**

MARKS

Q.1 **Short Questions** **14**

1 Soderberg relation is based on _____ of the material whereas all other failure relation for dynamic loading are based on ultimate strength of the material.
A. Elastic strength B. Yield strength
C. Shear strength D. None of above

2 The value of stress concentration factor depends upon
A. Material of the part B. Geometry of the part
C. Material and geometry of the part D. None of these

3 The maximum normal stress theory is used for
A. Brittle materials B. Ductile materials
C. Plastic materials D. Non-ferrous materials

4 The difference between the tooth space and the tooth thickness as measured on the pitch circle, is called
A. Working depth B. Clearance
C. Face width D. Backlash

5 In a gear, having involute teeth, the normal to the involute is a tangent to the
A. Pitch circle B. Base circle
C. Addendum circle D. Dedendum circle

6 Idler pulley is used for
A. Increasing velocity ratio B. For applying tension
C. Changing the direction of motion of belt
D. All of these

7 When spring index increases, the value of Wahl's stress factor
A. Increases linearly B. Decreases linearly
C. Remains same D. Increases exponentially

8 In case of pressure vessels having closed ends, the fluid pressure induces
A. Longitudinal stress B. circumferential stress
C. Shear stress D. None of these

9 The dedendum circle diameter is equal to (where φ = Pressure angle)
A. pitch circle diameter x $\cos \varphi$
B. addendum circle diameter x $\cos \varphi$
C. clearance circle diameter x $\cos \varphi$
D. pitch circle diameter x $\sin \varphi$

10 The cracks in helical springs used in railway carriages usually start on the inner side of the coil because of the fact that
A. It is subjected to a higher stress than the outer side
B. It is subjected to a higher cyclic loading than the outer side
C. It is more stretched than the outer side during the manufacturing process
D. It has a lower curvature than the outer side

11 According to law of gearing, the common normal at the point of contact between a pair of teeth must always pass through the pitch point.
A. True
B. False

12 In order to withstand resistance to wear, the best profile of gear is
A. $14\frac{1}{2}^{\circ}$ full depth involute tooth
B. 20° full depth involute tooth
C. 20° involute stub tooth
D. $14\frac{1}{2}^{\circ}$ stub tooth

13 Lewis equation in gears is used to find the
A. Tensile stress in bending
B. Shear stress
C. Compressive stress in bending
D. Fatigue stress

14 In order to determine the stresses in a thin cylinder due to an internal pressure, it is assumed that
A. The effect of curvature of the cylinder wall is neglected
B. The tensile stresses are uniformly distributed over the section of the walls
C. The effect of the restraining action of the heads at the end of the pressure vessel is neglected
D. All of the above

Q.2 **(a)** What is the difference between the Gerber Curve and Soderberg and Goodman line? **03**

(b) Differentiate Low cycle and High cycle Fatigue failure with suitable examples. **04**

(c) A cantilever beam of cold drawn steel 40C8 (S_{ut} = 600 N/mm^2 and S_{yt} = 380 N/mm^2) is shown in fig below. The force P acting at the free end varies from -50 N to +150 N. the expected reliability is 90% and the factor of safety is 2. The notch sensitivity factor at the fillet is 0.9. Determine the diameter 'd' of the beam at the fillet cross section. Ka = 0.77, Kb = 0.85, Kc = 0.897, Kt = 1.44 **07**

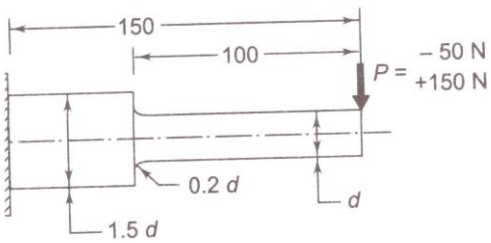

OR

(c) A simple band brake operates on a drum 600 mm in diameter rotating at 200 rpm. The coefficient of friction is 0.25 and the angle of contact of the band is 270°. One end of the band is fastened to a fixed pin and the other end to 125 mm from the fixed pin. The brake arm is 750 mm long. **07**

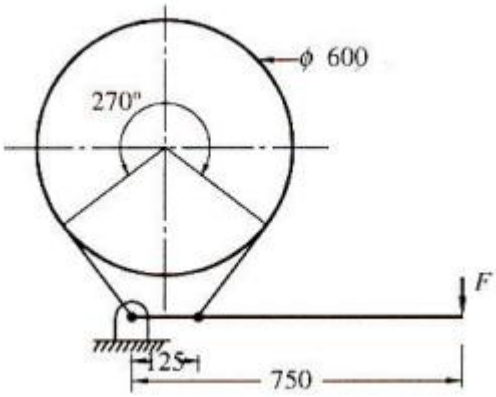

1. What is the minimum pull necessary at the end of the brake arm to stop the wheel if 35 kW is being absorbed? What is the direction of rotation for minimum pull?
2. Find the width of 2.5 mm thick steel band if the maximum tensile stress is not to exceed 50 N/mm^2.

Q.3 **(a)** Why is heat-dissipation necessary in Clutches? **03**

(b) What is the condition of self-locking in differential band brake? Why should it be avoided in speed-control brakes? **04**

(c) A multi plate clutch of alternate bronze and steel plates is to transmit 6 kW power at 800 rpm. The inner radius is 38 mm and outer radius is 70 mm. The coefficient of friction is 0.1 and maximum allowable pressure is 350 kN /m^2 determine: **07**

(i) Axial force required
(ii) Total number of discs
(iii) Average pressure
(iv) Actual maximum pressure

OR

Q.3 **(a)** Clutches are usually designed on the basis of Uniform wear. Justify the statement. **03**

(b) The mass of 2500Kg is lowered at a velocity of 1.5 m/s from the drum. The mass of drum is 50 Kg with radius of gyration is 0.7 m. On applying the brake, the mass is brought to the rest in a distance of 0.5 m. Calculate the energy absorbed by the brake. **04**

(c) It is required to select a V-Belt drive to connect a 15kW, 2880 rpm normal torque A.C. motor to a centrifugal pump, running at approximately 2400 rpm, for a service of 18 hours per day. The centre distance should be approximately 400 mm. Assume that the pitch diameter of the driving pulley is 125 mm. Take correction factor according to service Fa = 1.2, Correction factor for belt pitch length Fc = 0.87.Consider the cross section of V-belt is B. Pitch Length of belt is 1210 mm. Power Rating of Single V-belt Pr = 4.46kW. **07**

Q.4 **(a)** Explain Law of Gearing. **03**

(b) What is Wahl factor? Why it is used? **04**

	(c)	A pair of spur gears with 20^0 full depth involute teeth consist of a 20 teeth pinion meshing with a 41 teeth gear. The module is 3 mm while the face width is 40 mm. The material for pinion as well as gear is steel with an ultimate tensile strength of 600 N/mm^2. The gears are heat treated to a surface hardness of 400 BHN. The pinion rotates at 1450 rpm and the service factor for the application is 1.75. Assume that velocity factor accounts for dynamic load and the factor of safety is 1.5 Determine the rated power that the gears can transmit. Take Lewis Form factor = 0.32	**07**
		OR	
Q.4	**(a)**	Define: Crown Gear, Scoring, Pitting	**03**
	(b)	What is Surge in Spring? Explain.	**04**
	(c)	A pair of Parallel Helical gears consists of 24 teeth pinion rotating at 5000 rpm and supplying 2.5 kW power to gear. The speed reduction is 4:1. The normal pressure angle and helix angle are 20^0 and 23^0 respectively. Both gears are made of hardened steel (S_{ut} = 750 N/mm^2). The service factor and factor of safety are 1.5 and 2 respectively. The gears are finished to meet the accuracy of grade 4. 1. In the initial stage of gear design, assume that the velocity factor accounts for the dynamic load and that the face width is 10 times the normal module. Assume the pitch line velocity to be 10 m/s, estimate the normal module. 2. Select the first preference value of the normal module and calculate the main dimensions of the gears. 3. Determine the dynamic load using the Buckingham's equation and find out Sum of errors between pinion and gear. Take Y = 0.32, $e = 3.20 + 0.25\phi$, where $\phi = m_n + 0.25\sqrt{d}$	**07**
Q.5	**(a)**	Define Screw thread Terminology: Lead, Core diameter, Helix Angle	**03**
	(b)	When do you use Lame's equation for cylinder wall thickness? Derive the equation.	**04**
	(c)	Name the methods used to design thick cylinder to withstand internal pressure equal to or greater the allowable working stress. Also show the stress distribution across the wall thickness due to shrinkage fitting and internal fluid pressure.	**07**
		OR	
Q.5	**(a)**	What is Autofrettage? Explain.	**03**
	(b)	Why is the efficiency of self-locking square threaded screw less than 50%? Derive equation for the same.	**04**
	(c)	A Cast iron cylinder of internal diameter 200 mm and thickness 50 mm is subjected to a pressure of 5 N/mm^2. Calculate the tangential and radial stresses at the inner, middle (radius = 125 mm) and outer surfaces.	**07**

****