Seat No.: _____ **Enrolment No._____**

GUJARAT TECHNOLOGICAL UNIVERSITY

BE - SEMESTER–V (NEW) - EXAMINATION – SUMMER 2017

Subject Code: 2152509 **Date: 03/05/2017**

Subject Name: Machine Dynamics

Time:02:30 PM to 05:00 PM **Total Marks: 70**

Instructions:

1. **Attempt all questions.**
2. **Make suitable assumptions wherever necessary.**
3. **Figures to the right indicate full marks.**

MARKS

Q.1 **Short Questions** **14**

1 The frequency of damped vibrations with viscous damping is _____ the frequency of undamped vibrations.

A) More than B) Less than

C) Same as D) None of above

2 In order to balance the reciprocating masses,

A) Primary forces and couples must be balanced

B) Secondary forces and couples must be balanced

C) Both (A) and (B)

D) None of these

3 The natural frequency of free transverse vibrations due to a point load acting over a simply supported shaft is equal to (where δ = Static deflection of a simply supported shaft due to the point load)

A) $\frac{0.4985}{\sqrt{\delta}}$ B) $\frac{0.5615}{\sqrt{\delta}}$

C) $\frac{0.571}{\sqrt{\delta}}$ D) $\frac{0.6253}{\sqrt{\delta}}$

4 When the sleeve of a Porter governor moves upwards, the governor speed

A) Increases B) Decreases

C) Remains unaffected

D) First increases and then decreases

5 A rotor supported at *A* and *B* carries two masses as shown in the below figure. The rotor is

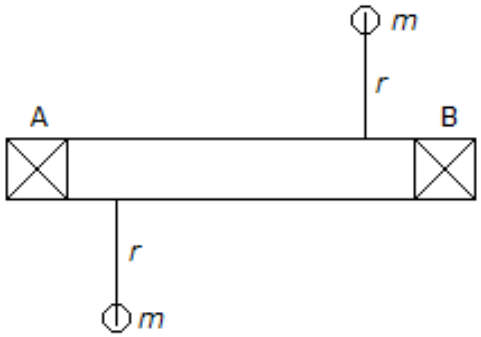

A) Dynamically balanced B) Statically balanced

C) Not balanced D) Both (A) and (B)

6 A body is said to be under forced vibrations, when

A) There is a reduction in amplitude after every cycle of vibration

B) No external force acts on a body, after giving it an initial displacement

C) A body vibrates under the influence of external force

D) None of the above

7 The natural frequency of free longitudinal vibrations is equal to (where m = Mass of the body, s = Stiffness of the body, and δ = Static deflection of the body)

A) $\frac{1}{2\pi}\sqrt{\frac{s}{m}}$

B) $\frac{1}{2\pi}\sqrt{\frac{g}{\delta}}$

C) $\frac{0.4985}{\sqrt{\delta}}$

D) any one of these

8 In under damped vibrating system, if x_1 and x_2 are the successive values of the amplitude on the same side of the mean position, then the logarithmic decrement is equal to

A) x_1/x_2

B) $\log x_1/x_2$

C) $\log_e x_1/x_2$

D) $\log(x_1 - x_2)$

9 When the speed of the engine fluctuates continuously above and below the mean speed, the governor is said to be

A) stable

B) unstable

C) isochronous

D) hunt

10 The balancing of a rigid rotor can be achieved by appropriately placing balancing masses in

A) A single plane

B) Two planes

C) Three planes

D) Four planes

11 A governor is said to be stable, if the

A) radius of rotation of balls increases as the equilibrium speed decreases

B) radius of rotation of balls decreases as the equilibrium speed decreases

C) radius of rotation of balls increases as the equilibrium speed increases

D) radius of rotation of balls decreases as the equilibrium speed increases

12 In the two rotor system as shown in the below figure ($I_1 < I_2$), a node of vibration is situated

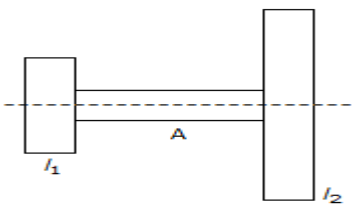

A) between I_1, and I_2 but nearer I_1

B) between I_1, and I_2 but nearer to I_2

C) exactly in the middle of the shaft

D) nearer to I_1 but outside

13 If the damping factor for a vibrating system is unity, then the system will be

A) over damped

B) under damped

C) critically damped

D) without vibrations

14 A Porter governor is a

A) Pendulum type governor B) Dead weight governor

C) Spring loaded governor D) Inertia governor

Q.2 **(a)** State and explain D'Alembert's principle. **03**

(b) Explain Dynamically equivalent system. **04**

(c) The piston diameter of an internal combustion engine is 125 mm and the stroke is 220 mm. the connecting rod is 4.5 times the crank length and has a mass of 50 kg. The mass of the reciprocating part is 30 kg. The centre of mass of the connecting rod is 170 mm from the crank pin centre and the radius of gyration about an axis through the centre of mass is 148 mm. the engine runs at 320 rpm. Find the magnitude and direction of inertia force and corresponding torque on the crankshaft when the angle turned by the crank is 140^0 from the IDC. Use Analytical Method. **07**

OR

(c) Explain the method of balancing of different masses revolving in the same plane. **07**

Q.3 **(a)** Explain the effects of partial balancing on reciprocating parts of two cylinder locomotives. **03**

(b) Determine the unbalanced force and couples in case of following in-line engines: **04**

I Two-cylinder engine

II Four cylinder four-stroke engine

III Six cylinder four-stroke engine

(c) For two cylinder locomotive, if Rotating mass per cylinder is 280 kg, Reciprocating mass per cylinder is 300 kg, distance between wheels is 1400 mm, distance between cylinder centres is 600 mm, distance of treads of driving wheels is 1800 mm, crank radius is 300 mm, Radius of centre of balance mass is 620 mm, speed of loco is 50 km/hr, angle between cylinder crank is 90^0, dead load on each wheel is 3.5 tonne, find (I) balancing mass required in the plane of driving wheels if whole of the revolving and two third of the reciprocating mass are to be balanced, (II) swaying couple, (III) variation in the tractive force, (IV) max. and min. pressure on the rails, (V) max. speed of loco without lifting the wheels from the rail. **07**

OR

Q.3 **(a)** Define : damping coefficient, critical damping coefficient , damping factor **03**

(b) Describe Dunkerley's method to find the natural frequency of shaft carrying several loads. **04**

(c) The reciprocating mass per cylinder in a 60^0 V-twin engine is 1.5 kg. The stroke and connecting rod length are 100 mm and 250 mm respectively. If the engine runs at 2500 r.p.m., determine the maximum and minimum values of the primary forces. Also find out the resultant secondary force **07**

Q.4 **(a)** What are the basic elements of a vibratory system? What is the degree of freedom? **03**

(b) What is the logarithmic decrement? Derive the relation for the same. **04**

(c) The mass of a single degree damped vibrating system is 7.5 kg and makes 24 free oscillations in 14 seconds when disturbed from its equilibrium position. The amplitude of vibration reduces to 0.25 of its initial value after five oscillations. Determine: 1. Stiffness of the spring. 2. Damping factor, i.e. the ratio of the system damping to critical damping. **07**

OR

Q.4 **(a)** Define the following terms: **03**

Resonance, Dynamic Magnification Factor, Whirling speed of shaft.

(b) A link AB in a mechanism is a rigid bar of uniform section 0.3 m long. It has a mass of 10 kg, and a concentrated mass of 7 kg is attached at B. The link is hinged at A and is supported in a horizontal position by a spring attached at the midpoint of the bar. The stiffness of the spring is 2 kN/m. Find the frequency of small free oscillations of the system. The system is as shown below. **04**

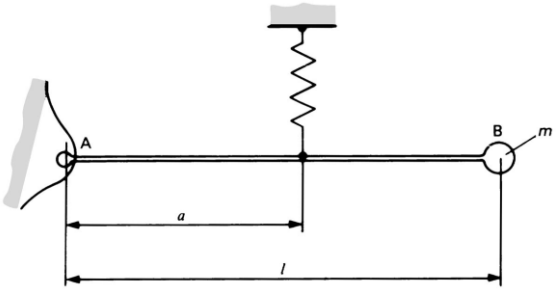

(c) A structure is modeled by the three degree system shown. Only translational motion in a vertical direction can occur. **07**

Show that the influence coefficients are

$$\alpha_{11} = \alpha_{22} = \alpha_{33} = \frac{1}{2}k$$

$$\alpha_{21} = \alpha_{32} = \alpha_{32} = \frac{1}{4}k$$

and proceed to find the flexibility matrix. Hence obtain the lowest natural frequency of the system and the corresponding mode shape.

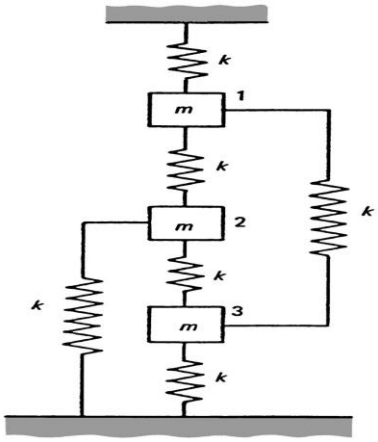

Q.5 **(a)** How does a porter governor differ from that of a watt governor? **03**

(b) Derive expressions for 'effort' and 'power' of a porter governor. **04**

(c) A gramophone is driven by a Pickering governor. The mass of each disc attached to the centre of a leaf spring is 20 g. The each spring is 5 mm wide and 0.125 mm thick. The effective length of each spring is 40 mm. The distance from the spindle axis to the centre of gravity of the mass when the governor is at rest, is 10 mm. Find the speed of the turntable when the sleeve has risen 0.8 mm and the ratio of the governor speed to the turntable speed is 10.5. Take E = 210 kN/mm^2 **07**

OR

Q.5 **(a)** Draw the neat sketch of Hartnell Governor. **03**

(b) Derive the expression for the height of a Watt governor with usual notations. **04**

(c) The arms of Hartnell governor are of equal length. When sleeve is in the mid position, the masses rotate in a circle with a diameter of 150 mm. the equilibrium speed for this position is 360 rpm. Max. variation in the speed when friction considered is to be 6 % of the mid position speed for max. sleeve movement of 30 mm. The sleeve mass is 5 kg and friction at sleeve is 35 N. **07**

Assume that the power of governor is sufficient to overcome the friction by 1% change of speed on each side of the mid position, find (I) Mass of each rotating ball, (II) spring stiffness, (III) initial compression of the spring.

****