Seat No.: _____ **Enrolment No._____**

GUJARAT TECHNOLOGICAL UNIVERSITY

BE - SEMESTER–VII (NEW) - EXAMINATION – SUMMER 2017

Subject Code: 2171903 **Date: 06/05/2017**

Subject Name: Computer Aided Manufacturing

Time: 02.30 PM to 05.00 PM **Total Marks: 70**

Instructions:

1. **Attempt all questions.**
2. **Make suitable assumptions wherever necessary.**
3. **Figures to the right indicate full marks.**

Q.1	**(a)**	What is CIM? Explain Components of CIM.	**07**
	(b)	What are the different types of manufacturing? Make an assessment of the extent of computer control in specific cases of each types of manufacturing.	**07**
Q.2	**(a)**	Explain clearly the difference between NC, CNC and DNC machine.	**07**
	(b)	Explain recirculating ball screw used in CNC machine.	**07**
		OR	
	(b)	Explain the cutter radius compensation to the left and right with suitable illustration.	**07**
Q.3	**(a)**	What are the essential elements of a PLC system?	**07**
	(b)	Why is part classification and coding required in GT. Explain OPTIZ system of coding.	**07**
		OR	
Q.3	**(a)**	Explain the variant type CAPP system. State the benefits and limitations of variant type CAPP systems.	**07**
	(b)	What is Group Technology? What are the advantages of GT in manufacturing?	**07**
Q.4	**(a)**	Write short note on Automatic Storage and Retrieval Systems and their applications areas in FMS.	**07**
	(b)	What are the different types of drives used in robots?	**07**
		OR	
Q.4	**(a)**	What is FMS? Explain the basic components of FMS.	**07**
	(b)	Differentiate between a SCARA and a gantry robot.	**07**
Q.5	**(a)**	Explain the role of CMM in Computer Aided Quality Control. What are different elements of a CMM?	**07**
	(b)	What are the major functions of process planning? What are the main problems associated with manual process planning?	**07**
		OR	
Q.5	**(a)**	Develop a CNC program, using G and M code, to cut a slot for the component shown in fig.1 by using a end mill of diameter 6mm . The depth of slot is 5mm. Assume suitable data for speed, feed ,etc.	**07**
	(b)	Explain with neat sketch the various types of layouts used in FMS design and their applications.	**07**

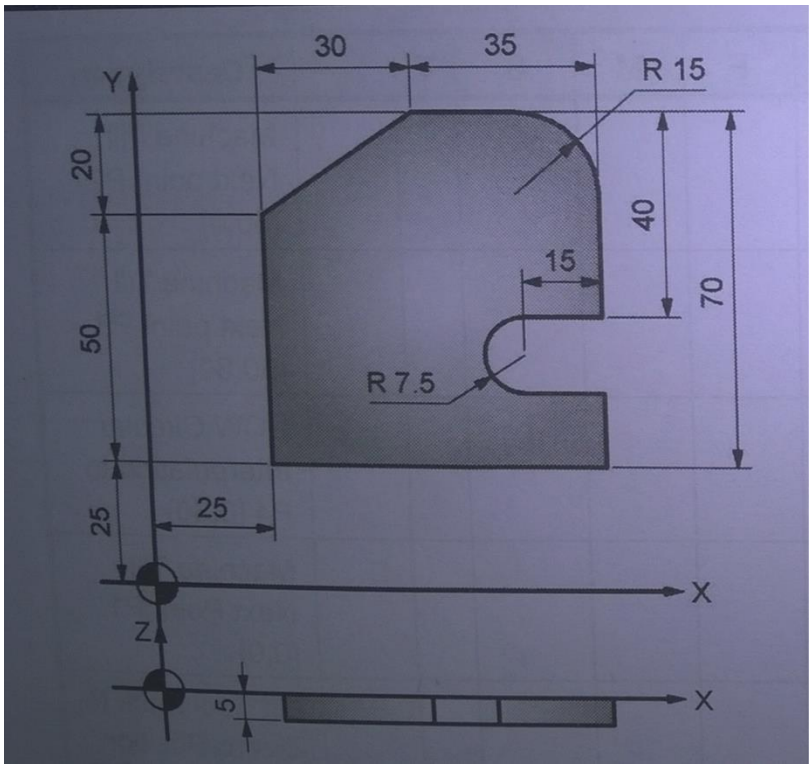

Fig.1

****