Seat No.: _____ **Enrolment No._____**

GUJARAT TECHNOLOGICAL UNIVERSITY

BE - SEMESTER–VII (NEW) - EXAMINATION – SUMMER 2017

Subject Code: 2172008 **Date: 09/05/2017**

Subject Name: Finite Element Analysis of Mechatronic Systems

Time: 02.30 PM to 05.00 PM **Total Marks: 70**

Instructions:

1. **Attempt all questions.**
2. **Make suitable assumptions wherever necessary.**
3. **Figures to the right indicate full marks.**

Q.1 **(a)** Explain the steps involved in performing a finite element analysis. **07**

(b) Explain the significance of the following terms related to a Finite Element Problem **07**

1. Approximation function 2. Boundary conditions 3. Discretization

Q.2 **(a)** Explain the merits and demerits of finite element method over other methods. **07**

(b) Derive the elemental and global stiffness matrix of a spring and bar element using direct stiffness approach. **07**

OR

(b) Using direct stiffness approach or potential energy approach find the nodal displacements, forces in each element and the reactions for the spring assemblage shown in below figure **07**

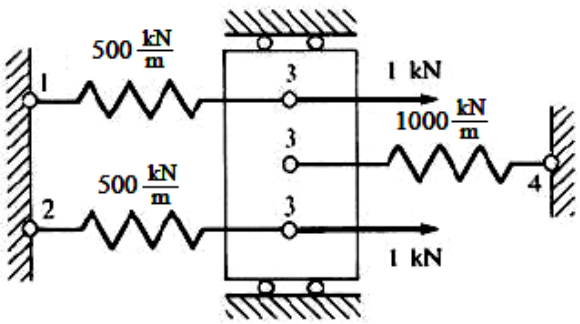

Q.3 **(a)** Derive the elemental and global stiffness matrix of a beam element using direct stiffness approach **07**

(b) What do you understand by Axisymmetric element? What are the conditions necessary to be followed for considering a problem as axisymmetric? Explain giving a suitable example. **07**

OR

Q.3 **(a)** Explain the procedure to be followed for selecting the approximation function for displacement. **07**

(b) Establish the shape function and derive the strain displacement matrix for axisymmetric element. **07**

Q.4 **(a)** For the two-bar truss shown in Figure, determine the displacement in the y direction of node 1 and the axial force in each element. A force of P =1000 kN is applied at node 1 in the positive y direction while node 1 settles an amount δ = 50 mm in the negative x direction. Let E =210 GPa and A = 6 x 10^{-4} m^2 for each element. The lengths of the elements are shown in the figure. **07**

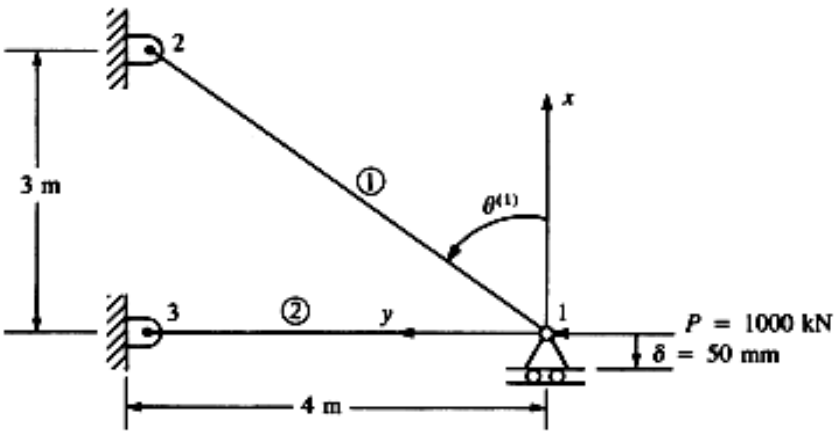

(b) For the plane truss shown in Figure, determine the displacements and reactions. Let E = 210 GPa, A = 6 x 10^{-4} m^2 for elements 1 and 2, and A = 6 $\sqrt{2}$ x 10^{-4} m^2 for element 3. **07**

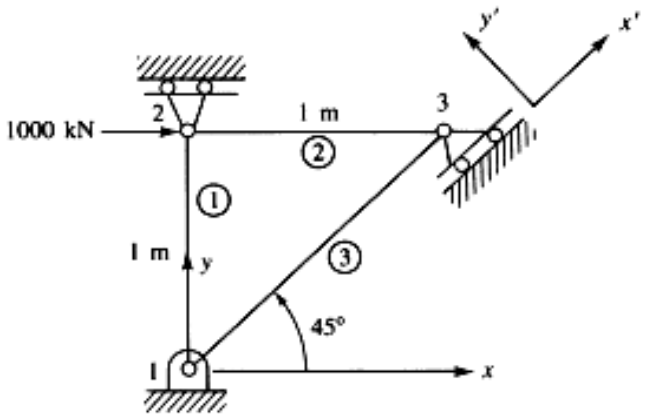

OR

Q.4 **(a)** Differentiate between plane stress and plane strain analysis giving a suitable example. Also indicate the conditions under which each one of them can be used. **07**

(b) Explain the different types of Elements used in Finite Element Analysis with a brief description of their applications. **07**

Q.5 **(a)** Consider the following displacement func/tion for the two noded bar element : $u = a + b\,x^2$. **07**
Is this a valid displacement function? Discuss.

(b) For the below shown beam find the displacements and slopes at the nodes, forces in each element and reactions. Also sketch the shear force and bending moment diagrams. **07**

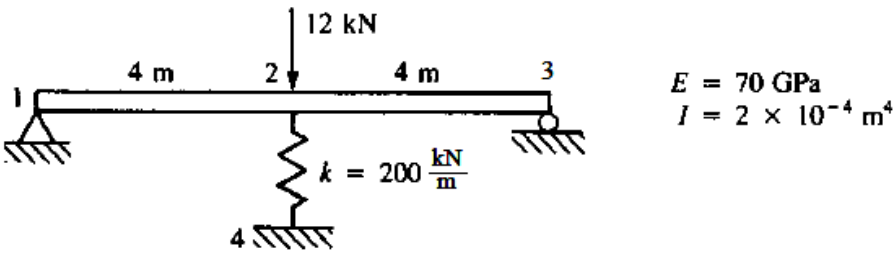

OR

Q.5 **(a)** Differentiate between CST and LST. **07**

(b) Discuss the importance of dynamics in Finite Element Analysis. Also explain the different types of nonlinearities. **07**

****