Seat No.: _____ **Enrolment No._____**

GUJARAT TECHNOLOGICAL UNIVERSITY

BE - SEMESTER–VIII (NEW) - EXAMINATION – SUMMER 2017

Subject Code: 2181914 **Date: 04/05/2017**

Subject Name: Rapid Prototyping(Department Elective II)

Time: 10:30 AM to 01:00 PM **Total Marks: 70**

Instructions:

1. **Attempt all questions.**
2. **Make suitable assumptions wherever necessary.**
3. **Figures to the right indicate full marks.**

Q.1	**(a)**	Explain the Generic RP process with neat sketch.	**07**
	(b)	Give the classification of Rapid Prototyping processes. Differentiate Subtractive Prototyping process and Additive Prototyping process.	**07**
Q.2	**(a)**	Explain in detail the structure of .STL file format and Enlighten the importance of .STL file format in RP.	**07**
	(b)	Compare the shape-based and the product data-based exchange standards. Which has the potential to support industrial automation? Why?	**07**
		OR	
	(b)	Explain the different errors occurs in RP processes.	**07**
Q.3	**(a)**	Explain Importance of part orientation in RP process in detail with neat sketch.	**07**
	(b)	Explain procedure of tool path generation from the slicing file with flowchart.	**07**
		OR	
Q.3	**(a)**	Give the classification of slicing procedure. Explain slicing of tessellated cad model in detail.	**07**
	(b)	Explain the procedure of slicing with flowchart.	**07**
Q.4	**(a)**	Explain Stereolithography process in detail with neat sketch.	**07**
	(b)	What are the different Rapid Tooling techniques? Explain silicon rubber tooling.	**07**
		OR	
Q.4	**(a)**	Explain Fused Deposition Modelling process in detail with neat sketch.	**07**
	(b)	List the various types of solid models and write the advantages and disadvantages of B-Rep models with neat sketch.	**07**
Q.5	**(a)**	Explain Solider Rapid Prototyping process in detail with neat sketch.	**07**
	(b)	The part shown in fig. no. 1 is to be fabricated using Stereolithography. Layer thickness = 0.10 mm. The diameter of the laser beam (“spot size”) = 0.15 mm, and the beam is moved across the surface of the photopolymer at a velocity of 400 mm/s. Compute an estimate for the time required to build the part, if 08 s are lost each layer to lower the height of the platform that holds the part. Neglect the time for post-curing.	**07**
		OR	
Q.5	**(a)**	Explain Beam Deposition (LENS) Rapid Prototyping process in detail with neat sketch.	**07**

(b) The part shown in fig. no. 1 is to be fabricated using Fused deposition modeling. Layer thickness is to be 0.15 mm and the width of the extrudate deposited on the surface of the part = 1.15 mm. The extruder work head moves in the *x-y* plane at a speed of 130 mm/s. A delay of 10 s is experienced between each layer to reposition the work head. Compute an estimate time required to build the part. **07**

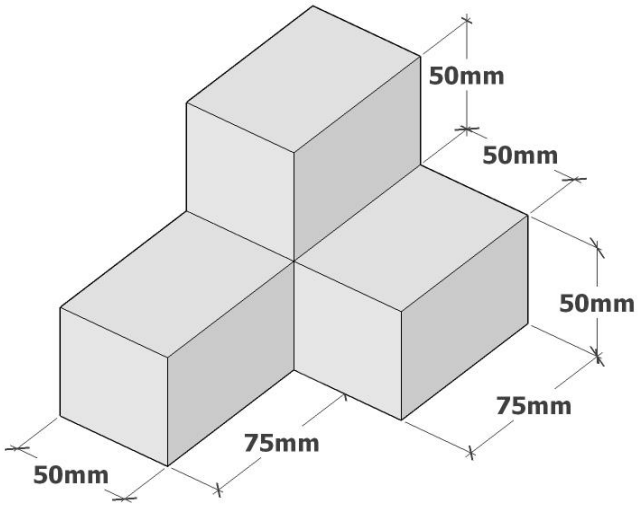

FIG.1

****