Seat No.: _____ **Enrolment No._____**

GUJARAT TECHNOLOGICAL UNIVERSITY

BE - SEMESTER–VIII (NEW) - EXAMINATION – SUMMER 2017

Subject Code: 2182001 **Date: 29/04/2017**

Subject Name: Programmable Logic Controllers

Time: 10:30 AM to 01:00 PM **Total Marks: 70**

Instructions:

1. **Attempt all questions.**
2. **Make suitable assumptions wherever necessary.**
3. **Figures to the right indicate full marks.**

Q.1	**(a)**	Draw and explain block diagram of PLC.	**07**
	(b)	How isolation is provided between PLC CPU and input from a plant to PLC? Also explain single channel DC output card for PLC using appropriate diagram.	**07**
Q.2	**(a)**	Explain various conventions to design ladder diagram for PLC.	**07**
	(b)	Write a detailed note on Sequential Function Chart (SFC) programming used to program PLCs with appropriate example.	**07**
		OR	
	(b)	The following devices/instruments are to be connected with PLC for a system control. Draw the interfacing/connection diagram showing the connection of these devices with PLC. (i) a temperature sensor (ii) a heater (iii) a DC motor running in one direction (iv) a normally opened pushbutton (vi) a single phase AC Fan (vii) a limit switch (viii) a weight sensor	**07**
Q.3	**(a)**	Explain ON delay and OFF delay timer instructions for PLC using their timing diagrams.	**07**
	(b)	Draw a PLC ladder diagram for the following Boolean expression **X=A[B(C+D+E)+C(D+E)+DE] + B[C(D+E)+DE] + CDE** Where, A, B, C, D, E are digital inputs and X is digital output.	**07**
		OR	
Q.3	**(a)**	List various counter instructions in PLC and explain any one of them using appropriate example.	**07**
	(b)	Explain analog output module of PLC using suitable block diagram	**07**
Q.4	**(a)**	Design and draw Functional Block Diagram (FBD) program for the ladder rung given in figure 1.	**07**
	(b)	Design and draw PLC ladder diagram to generate square wave at any digital output terminal with ON time of 10 seconds and OFF time of 5 seconds when toggle switch is ON. If toggle switch is made OFF, there should be no output at that digital output terminal.	**07**
		OR	
Q.4	**(a)**	Write Instruction List (IL) program for the ladder rung given in figure 1.	**07**

(b) Two feeder conveyors (F1 and F2) feed parts to main conveyor (M). At the end of both F1 and F2, proximity sensors are connected to sense parts. When start pushbutton is pressed, both F1 and F2 will turn on. F1 will turn off automatically after feeding 5 parts and F2 will turn off after feeding 10 parts. Thereafter waiting for 5 seconds, M will start automatically and will remain on for 50 seconds. If stop pushbutton is pressed in-between at any time, all feeders will stop. Develop and draw PLC ladder diagram to operate this sequence correctly. **07**

Q.5 **(a)** How a closed loop system can be controlled by a PLC? Explain in detail using suitable diagrams **07**

(b) Enlist different data comparison instructions in PLC and explain all of them in detail. **07**

OR

Q.5 **(a)** A mixing plant is to be controlled by PLC. There are two valves. A mixer is operated by a dc motor. A normally open START pushbutton is given to start the system and a normally closed STOP pushbutton is given to stop the system at any time. The system operates as per following sequences: - **07**

-When START is pressed, valve-1 will open and 200 kg of first material will be added in the tank.

- 30 seconds later, valve-2 will open and 100 kg of second material will be added in the tank.

- 1 minute later, mixer will turn ON for 1 minute in one direction

- 5 seconds later mixer will run in another direction for 30 seconds and process will stop automatically.

Assume suitable inputs/outputs and draw a PLC ladder diagram to control the system.

(b) List and explain various specifications of PLC which are required at the time of PLC purchase. **07**

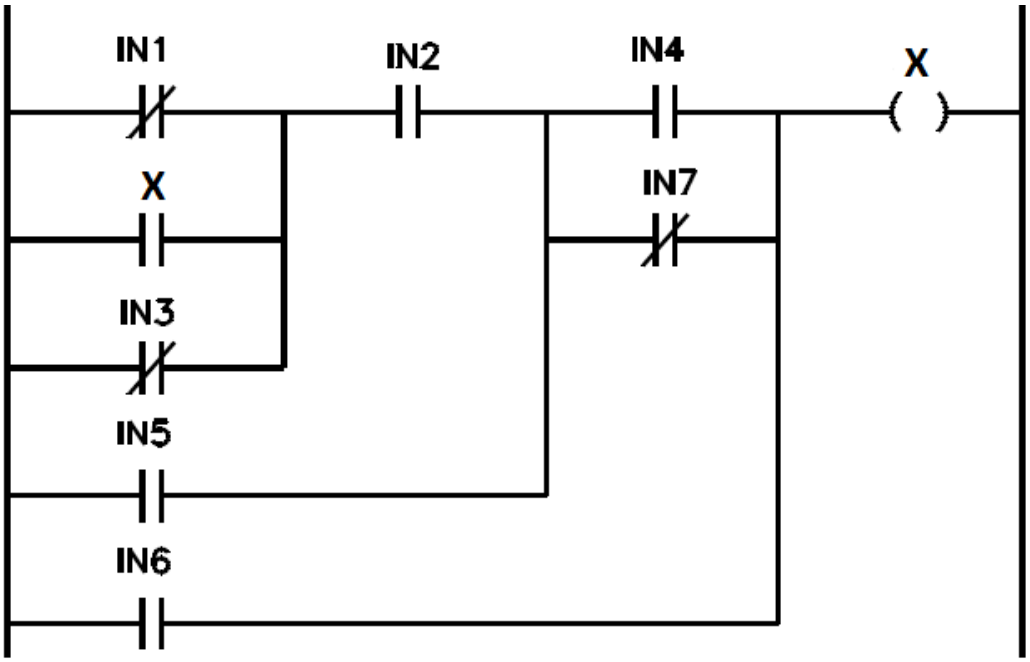

Figure 1 for Q.4 (a)

****