Seat No.: _____ **Enrolment No._____**

GUJARAT TECHNOLOGICAL UNIVERSITY

BE (SPFU) - SEMESTER–I-II (SPFU) - EXAMINATION – SUMMER 2017

Subject Code: ENG004 **Date: 12/06/2017**

Subject Name: MECHANICS OF SOLIDS

Time:02:30 PM to 05:00 PM **Total Marks: 70**

Instructions:

1. **Question No. 1 is compulsory. Attempt any four out of remaining Six questions.**
2. **Make suitable assumptions wherever necessary.**
3. **Figures to the right indicate full marks.**

Q.1 (a) Objective Question (MCQ) (each question carry one Mark) 07

1. Angle of repose is equal to angle of static friction when _____.
(A) motion is absent (B) system is in equilibrium
(C) motion is impending (D) body is on a flat surface

2. The condition for a lifting machine to be reversible is that its efficiency should be _____.
(A) less than 50 % (B) more than 50 %
(C) more than 66.67 % (D) equal to 100 %

3. The shape of shear force diagram for cantilever beam subjected to couple at free end is _____
(A) zero (B) horizontal straight line
(C) parabola (D) incline straight line

4. The difference of angle between two principal plane is _____°.
(A) 180 (B) 90
(C) 45 (D) 120

5. Lateral strains are _____ longitudinal strains.
(A) never less than (B) always less than
(C) sometimes less than (D) equal to

6. The moment of inertia of a triangular section of base (b) and height (h) about an axis through its c. g. and parallel to the base is given by the relation,
(A) $bh^3/12$ (B) $bh^3/24$
(C) $bh^3/36$ (D) $bh^3/48$

7. A heavy ladder resting on floor and against a vertical wall may not be in equilibrium if
(A) floor is smooth and wall is rough (B) floor is rough and wall is rough
(C) both floor and wall are rough (D) both floor and wall are smooth

Q.1 (b) Short Questions (each question carry one Mark) 07

1. Define angle of repose.
2. Define Law of Superposition
3. Define section modulus.
4. In a lifting machine a weight of 5 kN is lifted through 200 mm by an effort of 0.1 kN moving through 15 m. Calculate the mechanical advantage and velocity ratio of the machine.
5. Define point of contraflexure.
6. Define Modulus of rigidity.
7. Derive law of machine.

Q.2 (a) A steel bar 2500 mm long, 50 mm wide and 30 mm thick is subjected to an axial pull of load of 100 kN in the direction of its length. Find the changes in length, width, thickness and volume of the bar. Also find linear strain, lateral strain and volumetric strain. Take Es= 200 kN/mm^2 and Poisson's ratio = 0.3. **03**

	(b)	Derive formula for determine volumetric strain of circular bar of diameter 'd', length 'L', modulus of elasticity 'E' subjected to axial tensile force 'P' and Poisson's ratio 'μ'.	**04**
	(c)	A steel circular bar of 16 mm diameter is placed inside a copper tube, having internal diameter of 20 mm and thickness of 2.5 mm as shown in **fig. 1**. Both the ends are rigidly fixed and initially stress free. If the temperature of assembly is increased by 50ºC, compute magnitude and nature of stresses produced in each material. Take modulus of elasticity of steel and copper as 200 GPa and 100 GPa respectively. Take coefficient of thermal expansion (per ºC) for steel and copper as 12×10^{-6} and 18×10^{-6} respectively.	**07**
Q.3	**(a)**	Four forces of magnitude of 10N, 20N, 30N, 40N are acting respectively along the four sides of square ABCD as shown in **fig.2**. Determine resultant moment about point A. Each side of square is given 2m.	**03**
	(b)	A vehicle is pulled by a crane which has adjustable boom angle. The weight of the vehicle is 20kN and pulling force in rope of crane is P kN. Find the force in rope and its angle with horizontal such that vehicle always moves along a horizontal line with force 30 kN. Neglect friction between road and tyres of vehicle.	**04**
	(c)	A cylindrical roller weighing 1000 N is resting between two smooth surfaces inclined at 60º and 30º with horizontal as shown in **fig.3**. Draw free body diagram and determine reactions at contact points A and B.	**07**
Q.4	**(a)**	Define types of beams with sketchs.	**03**
	(b)	A simply supported beam of length 5m carries a uniformly distributed load of 20 kN/m over whole span and a point load of 100 kN at 3 m from left support of beam. Calculate the reaction at both ends.	**04**
	(c)	Draw shear force diagram and bending moment diagram for beam shown in **fig. 4.**	**07**
Q.5	**(a)**	State (*a*) Perpendicular axis theorem and (*b*) Parallel axis theorem of moment of inertia.	**03**
	(b)	Determine the M.I. of the I section about its central xx and yy axis. The particulars are: Top flange :- 300 mm x 50 mm ,Web :- 50 mm x 300 mm and Bottom flange 300 mm x 50 mm.	**04**
	(c)	Determine the location of centroid of plane lamina shown in **fig. 5** with respect to point O.	**07**
Q.6	**(a)**	State the condition of equilibrium for Co-planner force system.	**03**
	(b)	The following four coplanar forces are acting at a point O as given below: (1) 20N acting 30° North of East, (2) 25 N towards North, (3) 30 N towards North West and (4) 35 N inclined at 50° towards South of West. Determine the resultant in magnitude and direction analytically and graphically.	**04**
	(c)	Draw Shear force and Bending moment diagrams for the Beam as shown in **Fig. 6.**	**07**
Q.7	**(a)**	Draw representative shear stress distribution diagrams for a) hollow rectangle, b) I section, c) hollow circle.	**03**
	(b)	Determine deformation in each part of the bar ABCD shown in **Fig. 7**. Take $E = 2 \times 10^5$ N/mm^2.	**04**
	(c)	A wire rope is fixed at points A and D as shown in Fig. 8. Weights 20 kN and 30 kN are hung from B and C respectively. When equilibrium is reached, it is found that portions AB and BC are inclined at angles 30° and 50° respectively, to the vertical as shown in **Fig.8.** Find the tensions in the wire segments AB, BC and CD and also the vertical inclination of the segment CD.	**07**

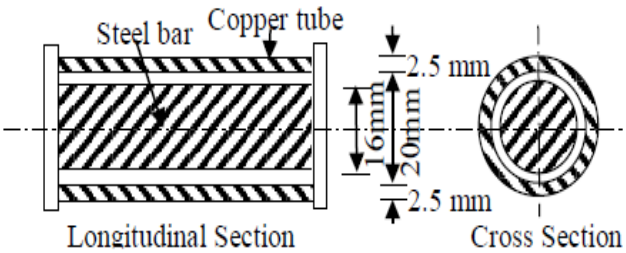

Fig. 1 Q.2 (c)

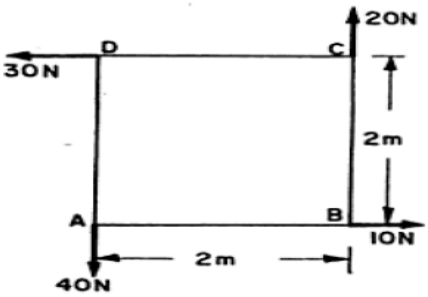

Fig. 2 Q.3 (a)

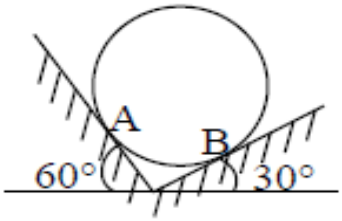

Fig. 3 Q.3 (c)

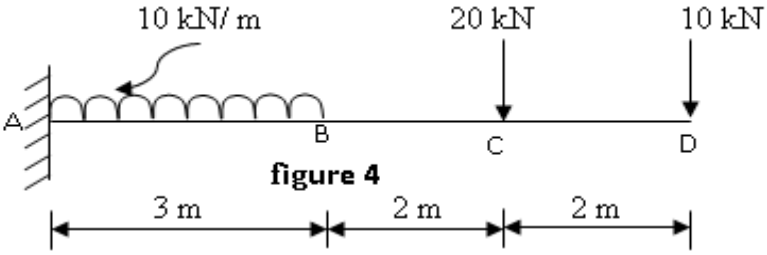

Fig. 4 Q.4 (c)

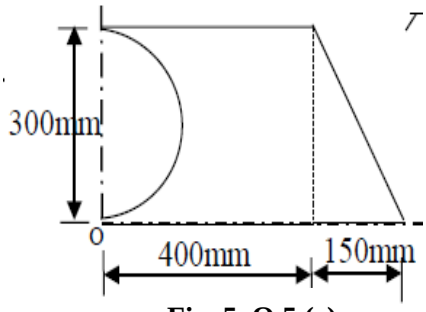

Fig. 5 Q.5 (c)

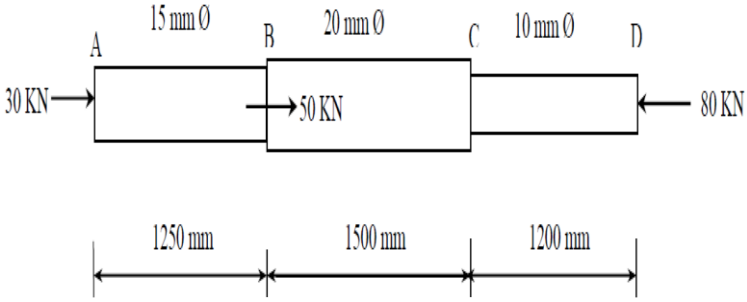

Fig.7 Q.7 (b)

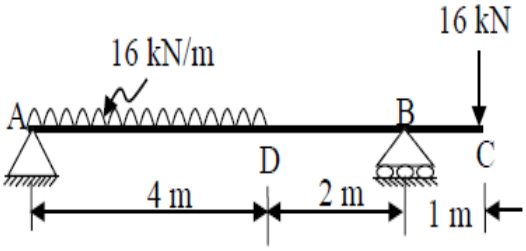

Fig.6 Q.6 (c)

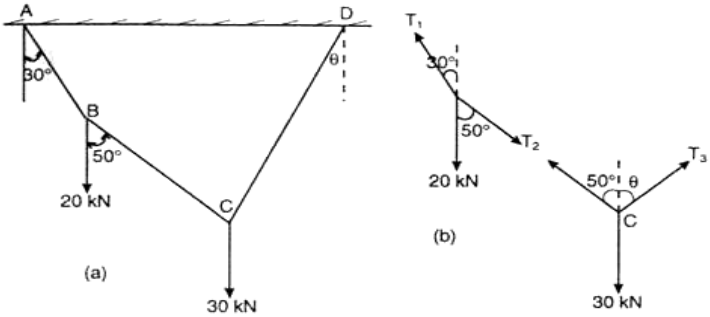

Fig.8 Q.7 (c)

****