Seat No.: _____ Enrolment No._____

GUJARAT TECHNOLOGICAL UNIVERSITY

BE - SEMESTER–III • EXAMINATION – SUMMER 2013

Subject Code: 130901 **Date: 04-06-2013**

Subject Name: Circuits and Networks

Time: 02.30 pm - 05.00 pm **Total Marks: 70**

Instructions:

1. **Attempt all questions.**
2. **Make suitable assumptions wherever necessary.**
3. **Figures to the right indicate full marks.**

Q.1 (a) Define following terms: **07**

(1) Linear and Nonlinear networks (2) Lumped and Distributed networks

(3) Passive and Active networks (4) Dependent source

(b) For magnetically coupled network shown in Fig.-1, find dot-convention and Write the KVL equations. **07**

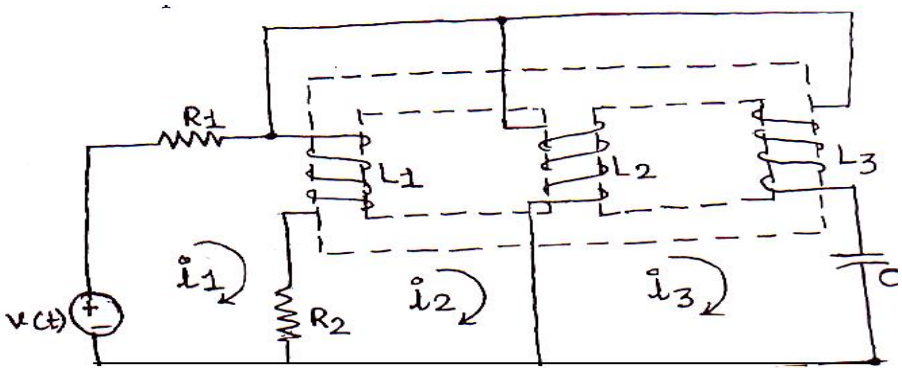

Fig.-1

Q.2 (a) Find currents through the resistors in the network of Fig.-2 using mesh analysis. **07**

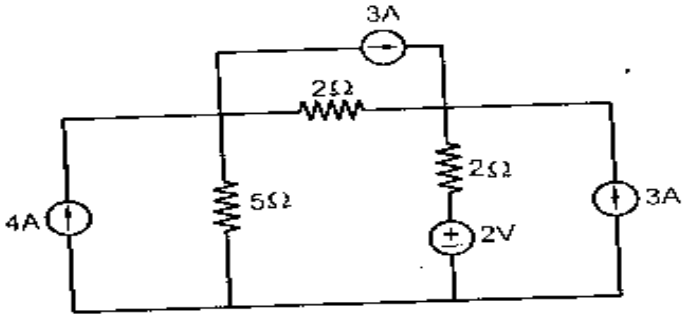

Fig.-2

(b) Determine the current through 2q resistor of Fig.3 using source transformation. **07**

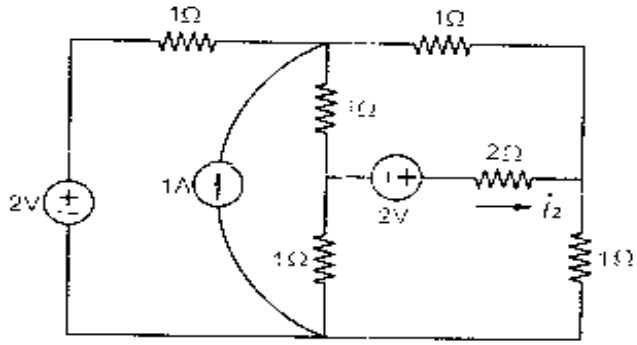

Fig.3

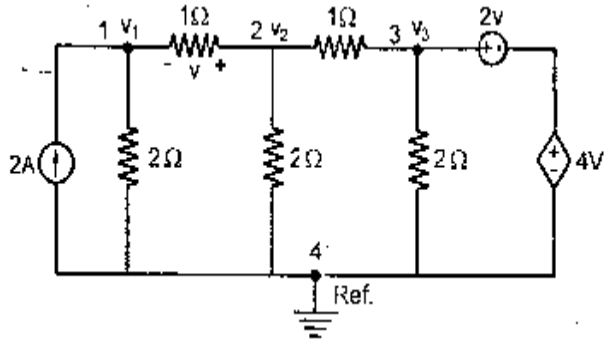

Fig.-4

OR

(b) In the network of Fig.-4 , determine the node voltages V_1, V_2 and V_3 using node analysis. **07**

Q.3 (a) In the network of Fig.-5 the switch K is opened at t=0. Find the values of V, dV/dt and d^2V/dt^2 at t=0+ if I=10A, R=10q and L=1H. **07**

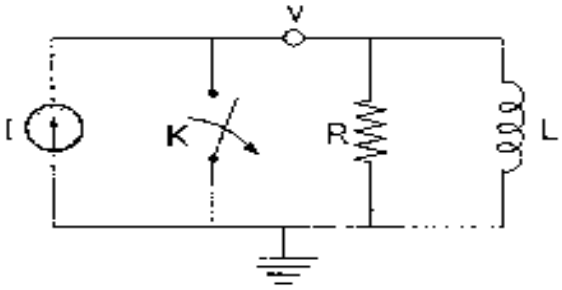

Fig.-5

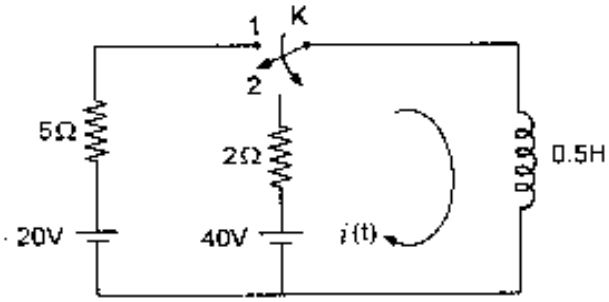

Fig.-6

(b) Derive necessary derivations for source free series R-L-C circuit. **07**

OR

Q.3 (a) In the network of Fig.-6, the switch K is moved from 1 to 2 position at t=0, steady state having previously been attained. Determine the current i(t). **07**

(b) In the network of Fig.-7, if the switch has remained in position A for a long time and then moves to position B at t=0. Find and plot Vc(t) for t Ó0 for R_2= 405q . **07**

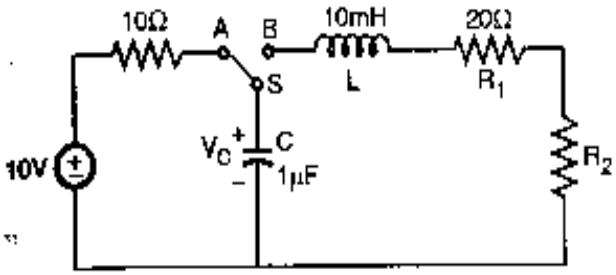

Fig.- 7

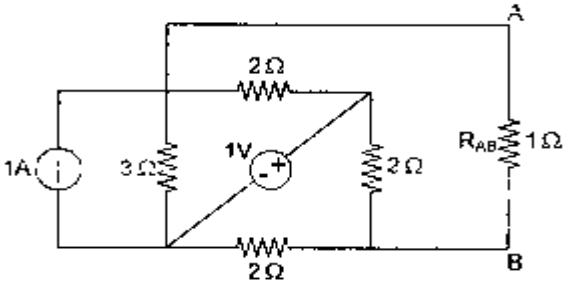

Fig.-8

Q.4 (a) State and explain Nortonôs theorem. **07**

(b) Discuss Duality in detail. **07**

OR

Q.4 (a) Determine the current in 1 q resistor of the network of Fig.-8 using Theveninôs theorem. **07**

(b) Derive relationship between Z-parameters and Y-parameters. Discuss Reciprocity and symmetry of network in brief. **07**

Q.5 (a) In the network of Fig.-9 , the switch K is moved from position a to b at t=0 (Steady state existing). Solve for the current i(t) using Laplace transformation method. **07**

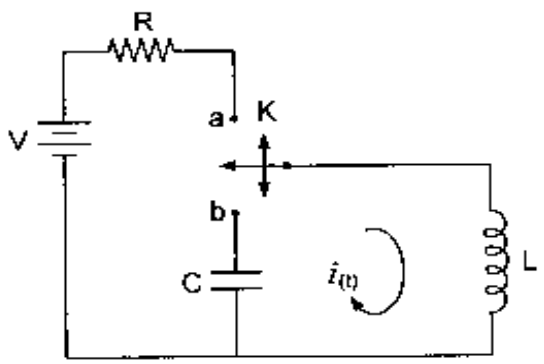

Fig.-9

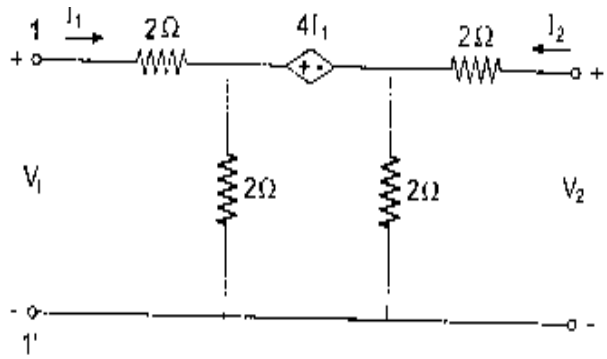

Fig.-10

(b) Find Z-parameters for the network of Fig.- 10 . **07**

OR

Q.5 (a) Explain the concept of poles and zeros and their significance. **07**

(b) Define Sub-graph. For the circuit shown in Fig.-11, draw the graph and write the

(i) incidence matrix and (ii) cutset matrix. **07**

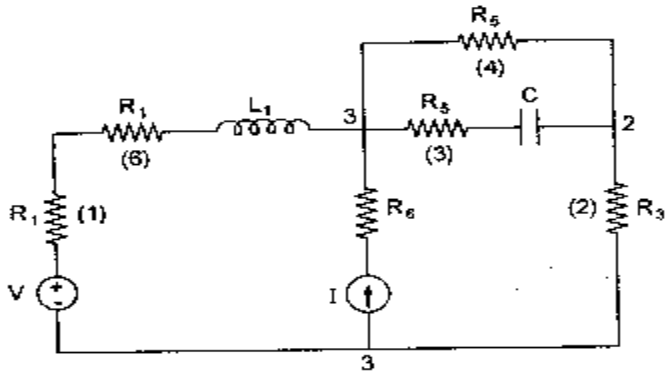

Fig.-11