Seat No.: _____ Enrolment No._____

# GUJARAT TECHNOLOGICAL UNIVERSITY

**BE - SEMESTER–III • EXAMINATION – SUMMER 2013**

**Subject Code: 131902** **Date: 27-05-2013**

**Subject Name: Machine Design and Industrial Drafting**

**Time: 02.30 pm - 05.30 pm** **Total Marks: 70**

**Instructions:**

1. **Attempt all questions.**
2. **Make suitable assumptions wherever necessary.**
3. **Figures to the right indicate full marks.**

**Q.1** **(a)** Attempt the following: **06**

(i) Define factor of safety and state the important factors affecting the factor of safety.

(ii) Explain the importance of selection of materials in machine design.

(iii) Explain any two stresses with simple sketches.

**(b)** Attempt the following. **08**

(i) Classify the different types of riveted joints? Explain the terms with the sketches- Pitch, Margin, Transverse pitch, Diagonal pitch.

(ii) Show by neat sketches the various ways in which a riveted joint may fail.

**Q.2** **(a)** A bolt of diameter d is enlarged near its head to a diameter D. The head is cylindrical having diameter D1 and thickness T as shown in figure-1. The bolt when fixed in a structure having 6 mm plate thickness t , takes a tensile load of P=30 KN. Determine the dimensions d, D, D1 of the bolt using design stresses for the material of bolt as: **07**

$\sigma_t$ =60 N/mm², $\sigma_c$ =50 N/mm², $\tau$ =35 N/mm²

**(b)** Design a double riveted, double strap, chain type butt joint for plates having 10mm thickness. Also find efficiency of the joint. **07**

Take $\sigma_t$ =95 N/mm², $\sigma_c$ =155 N/mm², $\tau$ =80 N/mm²

**OR**

**(b)** (i) What are the advantages of welded joint over riveted joint? **02**

(ii) A welded joint as shown in figure-2 is subjected to an eccentric load of 2 KN. Find the size of weld, if the maximum shear stress in the weld is 25 N/mm². **05**

**Q.3** **(a)** Attempt the following: **04**

(i) What are the uses of cotter joint? Why is taper provided on the cotter?

(ii) Explain the shear failure of a cotter in a simple socket and spigot cotter joint.

**(b)** Design a socket and spigot joint to resist a tensile load of 28 KN. All the parts of the joint are made from same material with following allowable stresses: **10**

$\sigma_t$ =50 N/mm², $\sigma_c$ =60 N/mm², $\tau$ =35 N/mm² , $\sigma_b$ =50 N/mm²

**OR**

**Q.3** **(a)** Attempt the following. **04**

(i) State the different applications of the Knuckle joint.

(ii) Define and draw sketches of : Key, cotter.

**(b)** Design a gib and cotter joint for square rod to carry maximum load of 35 KN. Assuming that the gib, cotter and rod are made from same material with following allowable stresses: **10**

$\sigma_t$ =20 N/mm², $\sigma_c$ =50 N/mm², $\tau$ =15 N/mm²

**Q.4** **(a)** Attempt the following: (Any two) **04**

(i) How are the hollow shafts are beneficial over the solid shafts?

(ii) State the reasons for failures of shafts?

(iii) Define ï Shaft, Axle ,Spindle

**(b)** A belt driven C.I pulley of 0.9 m diameter overhangs the bearing by 0.2 m as shown in figure-3. The pulley is driven from the bottom by a belt. The angles of lap and tension on tight side are 180° and 2600 N respectively. The weight of pulley is 600 N. Assume co-efficient of friction between pulley and belt is 0.25. Shaft is made up of 30C8. $\sigma_{yt}$ =400 N/mm², $\sigma_{ut}$ =500 N/mm² **10**

Determine the shaft diameter according to ASME code. Take Ks=1.0, $K_b$=1.5.

**OR**

**Q.4** **(a)** Differentiate between flexible coupling and rigid coupling? State the different applications of coupling? **04**

**(b)** Design and draw a rigid type cast iron flange coupling for a steel shaft transmitting 15 KW at 200 rpm and having an allowable shear stress of 40 KN/mm². The maximum torque is 25% greater than the full load torque. The working stress in the bolt should not exceed 30 KN/mm². Assume that the same material is used for shaft and key and that the crushing stress is twice the value of its shear stress. The shear stress for cast iron is 14 KN/mm². **10**

**Q.5** **(a)** Design a simple screw jack (bottle type) from the following data: **08**

Load capacity =100 KN

Maximum lift = 500 mm

For the 30C8 steel screw:

Suc=560 Mpa, Sy=300 Mpa, F.O.S = 7

Pitch of thread = 8 mm

For the P-bronze nut :

Pb=15 Mpa, $\sigma_t$ =60 MPa, $\tau$ =30 MPa

Co-efficient of friction for screw and nut=0.12

E = 2.1 x $10^5$ N/mm² for steel.

For the C.I body: $\sigma_c$ =100 Mpa

Find: (i) Major dimensions of screw and Nut

(ii) Check for stability.

**(b)** Design a lever of a lever loaded safety valve based on following data: **06**

Steam pressure acting on the valve = 1.2 MPa

Valve diameter = 60 mm.

Width to thickness ratio for lever = 3: 1

Length to diameter ratio for pins = 1.25 : 1

The material used is forged steel with $\sigma_t$ =80MPa, $\tau$ =50 Mpa,

$\sigma_c$ =100 Mpa, Pb = 20 Mpa

The lever has a rectangular cross section. The distance between the fulcrum and the dead weights on lever is 800 mm and distance between the fulcrum and the pin connecting the spindle of the valve to the lever is 100 mm.

Calculate: (i) the length and the diameter of the pin connecting the valve spindle to the lever (ii) the lever cross sectional dimensions

**OR**

**Q.5** **(a)** The following data refers to a C-clamp shown in figure-4 **08**

Thread form= Trapezoidal thread
Outer diameter of the thread= 12 mm
Pitch of the thread = 2 mm
Load W = 4 KN
Co-efficient of friction for screw threads = 0.12
Co-efficient of friction for collar = 0.25
Mean radius of the collar = 6 mm
Force exerted by operator at the end of handle = 80 N
Find: (i) The length of handle (ii) The maximum shear stress in the body of the screw and where does this exist?

**(b)** Attempt the following: **06**

(i) Explain the three basic types of levers with the help of neat sketches And practical examples.

(ii) For a lever, define : (1)leverage (2)arm of the lever (3)mechanical advantage

**********

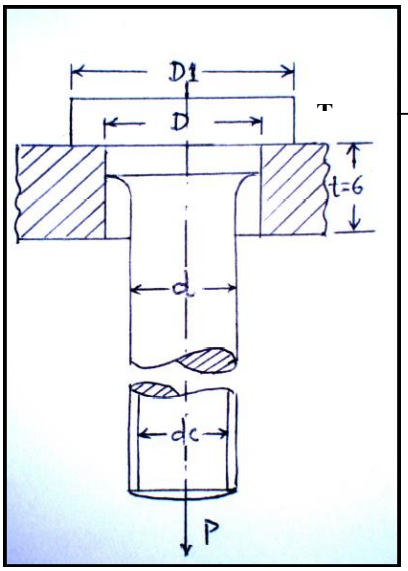


figure-1. Q-2 (a)

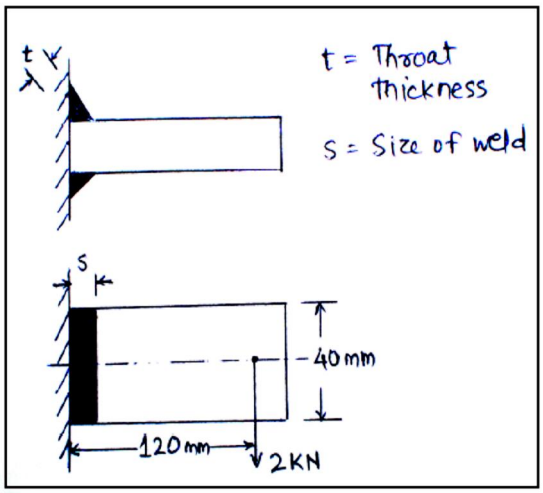


figure-2. Q-2 (b) (ii) (OR)

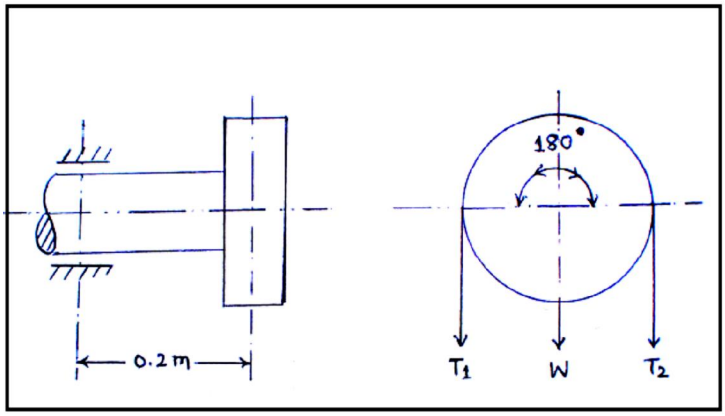


figure-3. Q-4 (b)

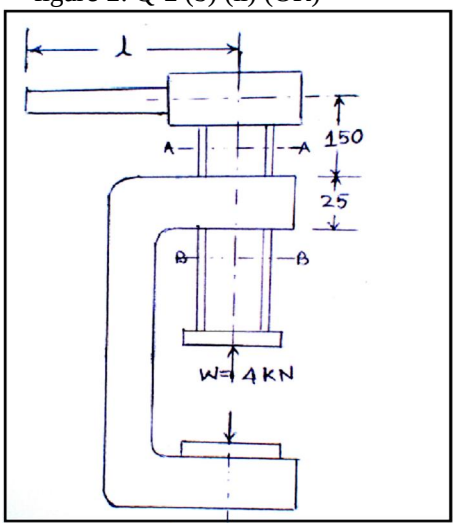


figure-4. Q-5 (a) (OR)