Seat No.: _____ Enrolment No._____

GUJARAT TECHNOLOGICAL UNIVERSITY

BE - SEMESTER–VI • EXAMINATION – SUMMER 2013

Subject Code: 160104 **Date: 03-06-2013**

Subject Name: Basic Control Theory

Time: 10.30 am - 01.00 pm **Total Marks: 70**

Instructions:

1. **Attempt all questions.**
2. **Make suitable assumptions wherever necessary.**
3. **Figures to the right indicate full marks.**

Q.1 **(a)** Explain Open loop control system and closed loop control system with block diagram. List two advantages, disadvantages and examples of both control system. **07**

(b) Using Masonôs Gain Formula, Find the transfer function C(S)/R(S) for the Signal Flow Graph shown in Figure (a). **07**

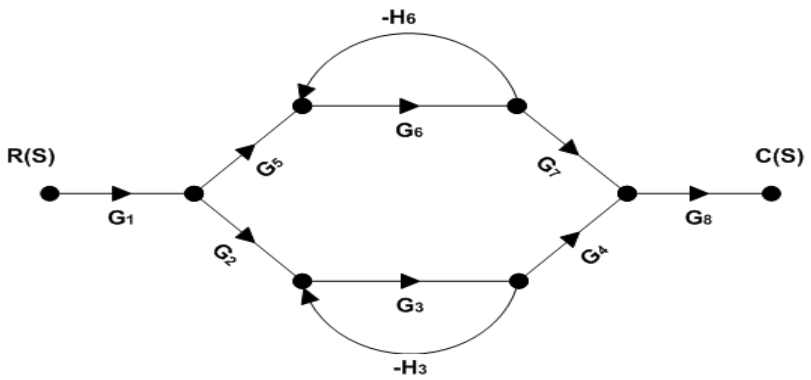

Figure (a).

Q.2 **(a)** For the mechanical system shown in figure (b), (1) Draw the node diagram (2) Write System equations of performance (3) Draw Force to Voltage analogous circuit. **07**

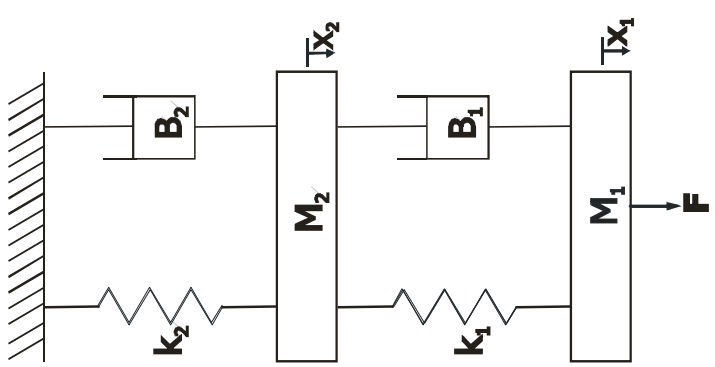

Figure (b).

(b) Reduce the Block Diagram to its Simple Form and obtain C(S)/R(S) (Refer Fig.(c)). **07**

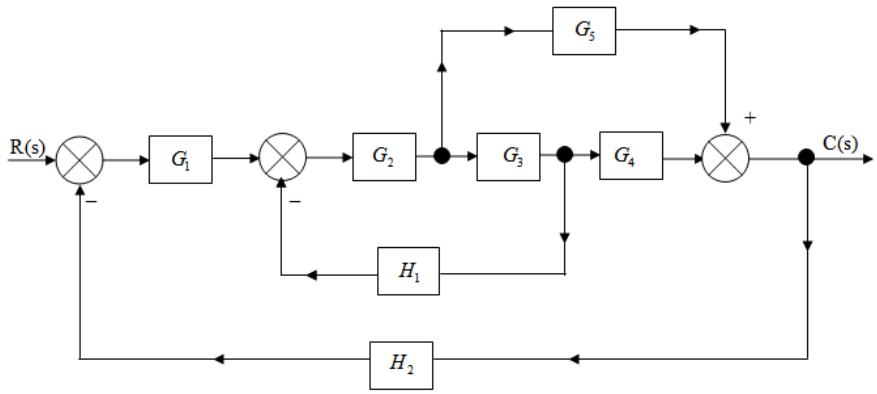

Figure (c).

OR

(b) Explain Force to Voltage and Force to Current Analogies System. **07**

Q.3 **(a)** Explain Transient Response Specification with diagram and write its equation. **07**

(b) For a unity feedback system $G(s)=\frac{800\,(s+2)}{s^2(s+10)(s+40)}$. Sketch the Bode plot and find Gain cross over frequency, Phase cross over frequency, Gain Margin, Phase Margin. Comment on stability. **07**

OR

Q.3 **(a)** Define the following frequency response specifications: (1) Bandwidth (2) Cutoff frequency (3) Cutoff rate (4) Phase Margin (5) Gain cross over frequency (6) Phase cross over frequency (7) Gain Margin. **07**

(b) For a system $G(s)H(s)=\frac{K}{s^2(s+2)(s+3)}$. Find the value of K to limit steady state error to 10 when input to system is $1+10t+\frac{40}{2}t^2$. **07**

Q.4 **(a)** A unity feedback control system has $G(s)=\frac{10}{s\,(s+1)(s+2)}$. Draw Nyquist plot and comment on closed loop stability. (Consider point Q is intersection of polar plot with negative real axis is -1.66+j0). **07**

(b) Draw the Root Locus diagram for a closed loop system whose loop transfer function is given by, $G(s)H(s)=\frac{K}{s\,(s+5)(s+10)}$. Comment on the stability. **07**

OR

Q.4 **(a)** Comparison between Modern Control Theory and Conventional Control Theory. **07**

	(b)	Write advantages of Root Locus method. Write Matlab program to draw pole zero map, nyqusit plot and bode plot for $G(S) = \frac{s+2}{s^2+3s+4}$.	**07**
Q.5	**(a)**	For system $s^4 + 22s^3 + 10s^2 + s + k = 0$, find Kmar and w at Kmar.	**07**
	(b)	Definition (1) Time variant system (2) Time in-variant system (3) Man Made System (4) State Variable (5) Transfer Function (6) Stable System (7) Unstable System.	**07**

OR

Q.5	**(a)**	A second order system has a natural frequency of oscillation Wn = 2.5 rad/sec and undamped frequency of oscillation Wd = 2.0 rad/sec. (1) Calculate its percentage overshoot, when it is subjected to a step input (2) Calculate the resonant peak, if it is subjected to sinusoidal input.	**07**
	(b)	Write Mathematical expression for P,I,D,PI,PD,PID Controller and show the response of these controller to unit step load changes.	**07**

****