Seat No.: _____ Enrolment No._____

GUJARAT TECHNOLOGICAL UNIVERSITY

BE - SEMESTER–III • EXAMINATION – SUMMER • 2014

Subject Code: 132001 **Date: 28-05-2014**

Subject Name: Industrial Drafting

Time: 02.30 pm - 05.30 pm **Total Marks: 70**

Instructions:

1. **Attempt all questions.**
2. **Make suitable assumptions wherever necessary.**
3. **Figures to the right indicate full marks.**

Q.1 **(a)** Classify the various types of drawings used in mechanical engineering field. Explain any two of them. **07**

(b) Draw missing line or lines, full or dotted, in the orthographic views of the objects shown in Figure below. The answer must be supported by the rough sketch of an isometric view of the objects, without which no credit will be given for the answer. **07**

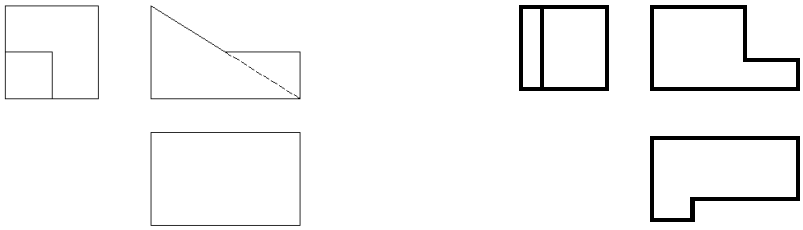

Q.2 **(a)** Draw two views of a hexagonal headed bolt, 30 mm diameter and 120 mm long, with a hexagonal nut and a washer. **07**

(b) A vertical cone, base 80 mm diameter and axis 110 mm long is penetrated by a horizontal cylinder, 45 mm diameter. The axis of the cylinder is 25 mm above the base of the cone, is parallel to the V.P. and is 10 mm away from the axis of the cone. Draw the projections of the solids showing curves of intersection. **07**

OR

(b) A vertical pipe of 60 mm diameter has a branch of 30 mm diameter. The axis of the branch is inclined at 45^0 to the ground, parallel to the V.P. and is 15 mm away from the axis of the main pipe. Draw the projections of the pipes showing the curve of intersection. **07**

Q.3 **(a)** Enlist various locking arrangement for nuts. Explain any two of them with rough sketch. **07**

(b) Explain the removed section and revolved section with suitable example. **07**

OR

Q.3 **(a)** Draw the conventional representation for indicating the wood, tin, cast iron, marble, holes on circular pitch, splined shafts and worm. **07**

(b) Draw according to first angel projection method: **07**

- Sectional front view along A-A
- Side view from the left

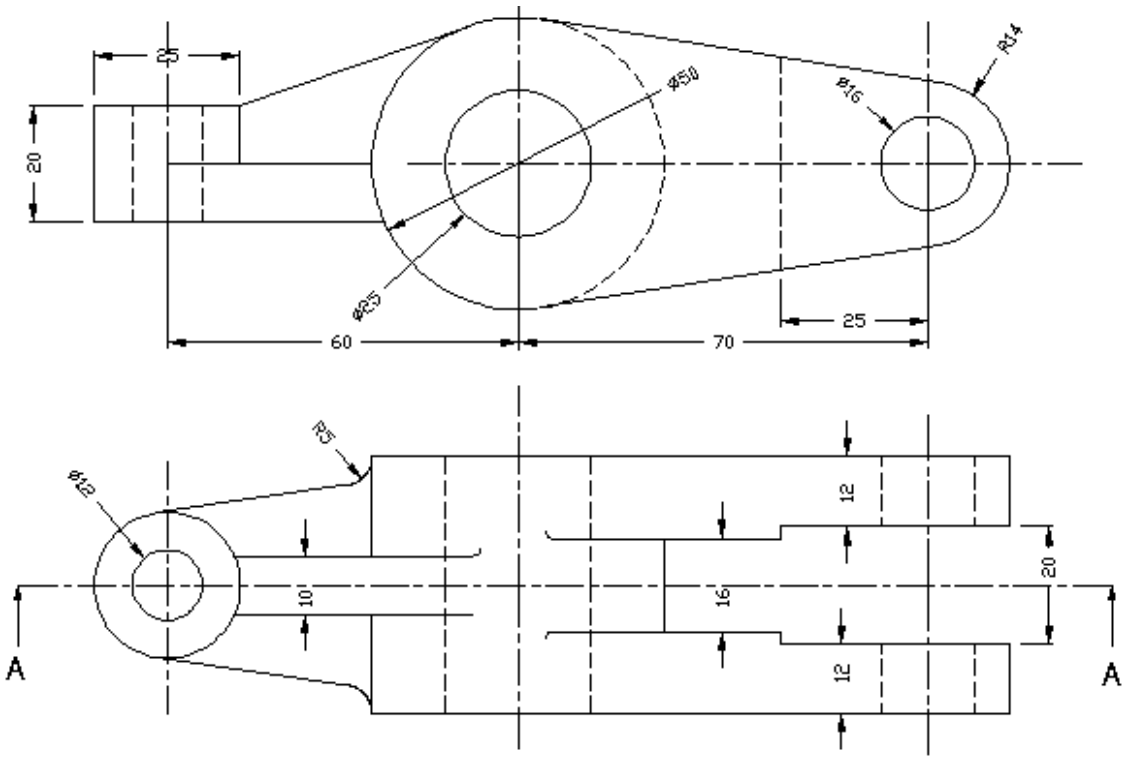

Q.4 **(a)** What is the function of foundation bolts? With the help of a neat sketch explain Lewis foundation bolt. **07**

(b) What is a T-bolt and how is it used? **07**

OR

Q.4 **(a)** Where and why the woodruff key is used? Explain with suitable example. **07**

(b) Draw a dimensioned sketch, of a cotter joint with gib for two square rods of 50 mm. **07**

Q.5 **(a)** Mention the advantages and disadvantages of a Computer Aided Drafting (CAD). **07**

(b) 1. Calculate the fundamental tolerance for a shaft of 90 mm and grade 10. **03**

Use geometrical mean D=100 mm and following table:

Grade	IT7	IT8	IT9	IT10	IT11	IT12
Tolerance Value	16i	25i	40i	64i	100i	160i

2. Explain the hole basis and shaft basis systems. **04**

OR

Q.5 **(a)** Enlist the various commands available in modify tool box of AUTO CAD. Explain any two of them by giving suitable example. **08**

(b) With help of sketches show the following: **06**

1. Flatness tolerance
2. Circularity tolerance
3. Angularity tolerance

****