Seat No.: _____ Enrolment No._____

GUJARAT TECHNOLOGICAL UNIVERSITY

BE - SEMESTER– IV • EXAMINATION – SUMMER 2014

Subject Code: 140605 **Date: 25-06-2014**

Subject Name: Advanced strength of Materials

Time: 10:30 am to 01:00 pm **Total Marks: 70**

Instructions:

1. **Attempt all questions.**
2. **Make suitable assumptions wherever necessary.**
3. **Figures to the right indicate full marks.**

Q.1	**(a)**	State Castigliano's first and Second theorem.	**03**
	(b)	Differentiate thin shell and thick shell.	**03**
	(c)	Differentiate bending of straight beam and bending of curved beam.	**03**
	(d)	Define the strain energy and derive the equation of strain energy stored in a circular shaft due to Torsion.	**05**
Q.2	**(a)**	Define the different theories of failure with condition of failures.	**07**
	(b)	A steel bar 80 cm long is rectangular in cross section 12 cm x 8 cm. the bar is subjected to an axial tensile load of 120 kN. A uniformly distributed compressive load of 80 kN is also applied on the 80 cm x 8 cm face. A compressive stress of 50 MN/m^2 applied on the 80 cm x 12 cm face. Find the total strain energy, the energy of distortion and energy of dilation. Take E = 210 GN/m^2 and μ = 0.28.	**07**
		OR	
	(b)	Find slope and deflection at point C for the beam shown in figure 1 using Castigliano's beam method. Take EI = 20000 $kN\text{-}m^2$.	**07**
Q.3	**(a)**	Derive an expression for bending stress, deflection and strain energy for laminated semi-elliptic leaf spring.	**07**
	(b)	An open coiled helical spring with mean coil diameter of 60 mm, wire of 7 mm diameter, helix angle 30º and number of coils 12 extends by 10 mm under an axial load. Find the load, the bending stress, torsional stress, maximum normal stress and maximum shear stress due to this load. Compare the deflections of closed coil spring for (i) same length of wire and (ii) same number of turns. Also calculate the value of axial torque which would cause a bending stress of 60 MN/m^2. Take E = 210 GN/m^2 and G = 80 GN/m^2.	**07**
		OR	
Q.3	**(a)**	A flat spiral spring 750 cm long has wire of rectangular cross section 30 mm broad by 0.6 mm thick. If the maximum bending stress is limited to 500 MN/m^2, find the maximum twisting moment that can be exerted at center spindle. How many turns are required to wind the spring from the run down or state of this condition? What is the energy stored in the spring? Find the force exerted at fastening in the fully wound condition if the fastening is at a distance of 80 mm from center of spindle. E = 200 GN/m^2.	**07**
	(b)	A steel bar 1.5 m long and 12 cm in diameter is subjected to an axial load of 1200 N. Find the maximum induced stress if 1. The load is applied gradually. 2. The load is applied suddenly. 3. The load is applied after falling through a height of 8cm. What are the strain energies in each of the above cases? Take E = 200 GN/m^2	**07**
Q.4	**(a)**	A cylinder vessel closed at end has internal and external radii of 25 cm and 40 cm respectively. If the cylinder is 2.5 m long and is subjected to water pressure	**07**

of 1000 bar. Find the circumferential, radial and longitudinal strain at inside and outside of cylinder. Hence calculate,

i. The change in length and change in internal and external radii
ii. The change in volume of the cylinder material excluding the material closing the ends

Take E= 200 GN/m^2 and μ=0.25

(b) Principal stresses at a point are -2σ, σ and 3σ. If failure occurs at stress of 250 N/mm^2 in simple tension and 800 N/mm^2 in simple compression, find the value of σ at the point of failure according to the following conditions. Take μ=0.30. **07**

i. Maximum Shear stress theory
ii. Maximum Shear strain theory
iii. Total strain energy theory

OR

Q.4 (a) A carriage spring 1.0 m long is supported at each ends. It carries two concentrated loads of 4 kN each at 30 cm, 75 cm from one end of leaf spring. Each leaf is 7.5 cm wide and 0.5 cm thick. Determine the number and length of leaves in order that material is not subjected to a bending stress greater than 250 MN/m^2 and spring is of constant strength. **07**

(b) A bolt is subjected to an axial pull of 14 kN together with a transverse shear force of 5 kN. Determine the diameter of the bolt according to each of the following theories of elastic failure. **07**

i. Maximum shear stress theory
ii. Maximum strain theory
iii. Strain energy theory
iv. Shear strain energy theory.

Given, the stress at the elastic limit is 300 N/mm^2, the factor of safety is 2.5 and Poisson's ratio 0.25.

Q.5 (a) A space-curved bar of circular in cross section is loaded as shown in figure 3. Calculate maximum and Minimum stresses at the critical section p-q. **07**

(b) Explain with diagram vertical, longitudinal and transverse shear stresses in a channel section. **07**

OR

Q.5 (a) Locate the Shear Centre. For the section shown in figure below, **07**

i. By taking web moment of inertia into account
ii. By neglecting web M.I.

(b) The maximum radial pressure in a circular disc of uniform thickness, When rotating at a certain speed is 25 MPa. The external radius of the disc is 500 mm and internal radius is 200 mm. Determine the speed of the disc. Also, determine the maximum hoop stress. The density of the disc material is 7500 kg/m^3 and Poisson's ratio is 0.25. **07**

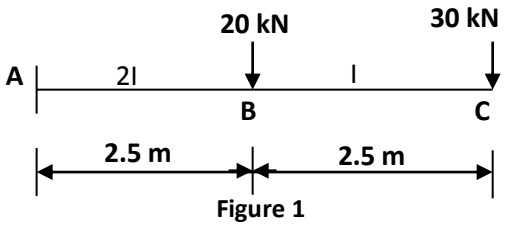

Figure 1

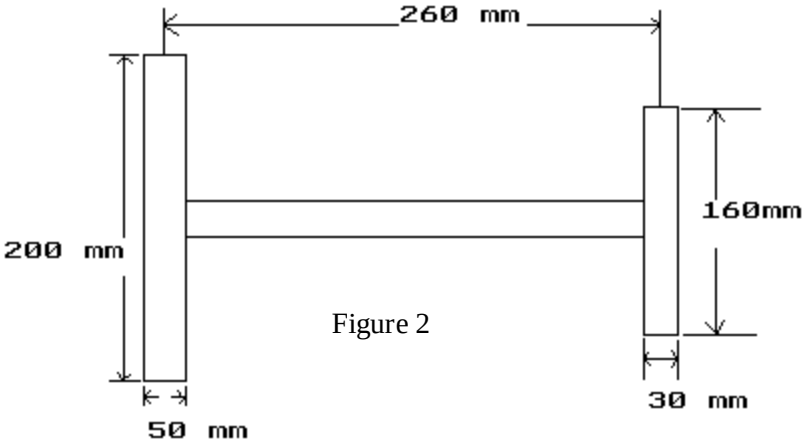

Figure 2

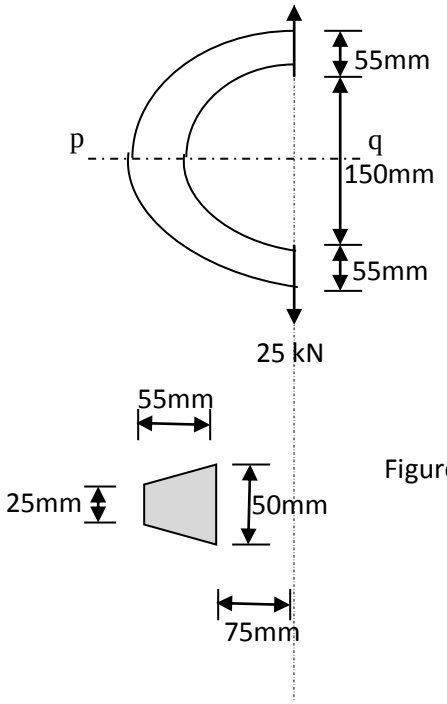

Figure 3