Seat No.: _____ Enrolment No._____

GUJARAT TECHNOLOGICAL UNIVERSITY

BE - SEMESTER–IV • EXAMINATION – SUMMER • 2014

Subject Code: 141701 **Date: 23-06-2014**

Subject Name: Control Theory

Time: 10:30 am - 01:00 pm **Total Marks: 70**

Instructions:

1. **Attempt all questions.**
2. **Make suitable assumptions wherever necessary.**
3. **Figures to the right indicate full marks.**

Q.1 **(a)** Explain open loop and closed loop control system with suitable example & gives its advantages and disadvantages. **07**

(b) Find the transfer function of Fig.1 using Mason's gain formula **07**

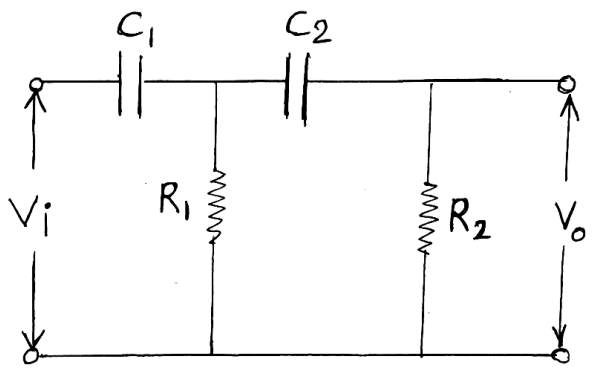

Fig : 1

Q.2 **(a)** Explain the advantages of state space approach over classical methods and obtain state variable equation. $\dot{X} = A\,X + B\,U$ and $Y = C\,X + D\,U$ Also draw the block diagram. **07**

(b) Explain Rules for block diagram reduction technique. **07**

OR

(b) Write the differential equations for the mechanical system shown in Fig.2. Also obtain an analogous electrical circuit based on force-current analogy. **07**

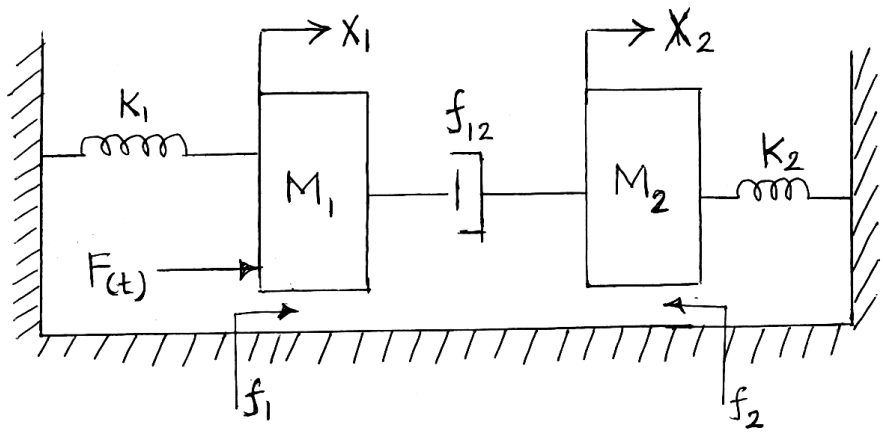

Fig : 2

Q.3 **(a)** By means of Routh criterion, determine the stability of the system described by characteristic equations. **07**

(1) $S^4 + 2\,S^3 + 8\,S^2 + 4\,S + 3 = 0$

(2) $3S^4 + 10\,S^3 + 5\,S^2 + 5\,S + 2 = 0$

(b) Explain following terms with necessary diagrams. **07**

(1) Delay Time (2) Rise Time (3) Peak Time

(4) Steady state error (5) Settling Time.

OR

Q.3 **(a)** Explain standard Test signals & derive equation of steady state error. **07**

(b) A certain Feedback control system is described by the following transfer function. **07**

$G(s) = K / S^2 (S+20) (S+30)$, $H(s) = 1$

Determine steady state error coefficients & also determine the value of K to limit the steady state error to 10 units due to input $r(t) = 1 + 10t + 20t^2$.

Q.4 **(a)** Discuss Nyquist's stability criterion. **07**

(b) What are the Bode plots? With necessary diagrams explain the following terms. **07**

(1) Gain cross over frequency (2) Phase cross over frequency

(3) Gain Margin (4) Phase Margin.

OR

Q.4 Sketch the Root Locus of unity feedback control system with **14**

$G(s) = K/S(S+1)(S+3)$ and determine the value of K for Marginal stability.

Q.5 **(a)** Write a short note on thermal system , its modeling and analysis for two different inputs. **07**

(b) Explain Rules for construction of Root Locus. **07**

OR

Q.5 **(a)** What is Transfer function ? Discuss its properties, advantages & disadvantages of it. **07**

(b) Find Polar Plots of $G(s) = 1/ (1+P_1S) (1+P_2S)$ **07**

****