Seat No.: _____ Enrolment No._____

GUJARAT TECHNOLOGICAL UNIVERSITY

BE SEMESTER – V • EXAMINATION – SUMMER 2014

Subject Code: 150103 **Date: 19-06-2014**

Subject Name: Aircraft Structure II

Time: 10:30 am to 01:00 pm **Total Marks: 70**

Instructions:

1. **Attempt all questions.**
2. **Make suitable assumptions wherever necessary.**
3. **Figures to the right indicate full marks.**

Q.1	**(a)**	State Castigliano's displacement theorem. Also write the general equation of it for rotation.	**02**
	(b)	Justify the statement: "Stability of indeterminate structure is generally higher than that of determine structure".	**03**
	(c)	In a member if Centre of Gravity and Shear Centre of a section is coincide, the member is free from _____ . [Torsion, Bending, Axial stress]	**02**
	(d)	The diagonal terms in Stiffness Matrix is always _____. [negative, 0, positive]	**02**
	(e)	The primary unknown in Flexibility Matrix Method is _____ and the secondary unknown is _____ . [Displacement, Force]	**02**
	(f)	State the difference between Symmetrical bending and Unsymmetrical Bending.	**03**
Q.2	**(a)**	For a beam as shown in fig.1, What are the basic determinate structure (beams) are possible?	**05**
	(b)	Find the basic unknowns and plot SF and BM diagrams for a beam as shown in Fig.-2 using Flexibility Matrix Method.	**09**
		OR	
	(b)	Analyze the truss as shown in fig.3 by Flexibility Matrix Method. The cross section area A and E for all member are same.	**09**
Q.3	**(a)**	1) State the difference between Displacement Method and Force Method of Structural Analysis. 2) Define the Terms: Stiffness and Flexibility. What is the relation between them?	**07**
	(b)	Obtain the Stiffness Matrix Method For a beam as shown in Fig.-2.	**07**
		OR	
Q.3	**(a)**	1) State the difference between Determinate and Indeterminate Structure. 2) Why Stiffness Matrix Method is generally preferred for computer programming.	**07**
	(b)	For a truss as shown in fig.-4, determine the displacement at joint A using Stiffness Matrix Method. Take A = 10000 mm^2 and E= 2 x 10^5 N/mm^2.	**07**
Q.4	**(a)**	Locate the Shear Centre of a 10 mm thin walled section as shown in fig.-6.	**07**
	(b)	Define the following terms: 1) Isotropic Material. 2) Orthotropic Material. 3) Anisotropic Material. Also write stress-strain relation in 3D elasticity for each material case.	**07**

OR

Q.4 **(a)** Prove that in unsymmetrical bending, the resultant deflection is lye in a plane perpendicular to neutral axis. **07**

(b) The rectangular stress component at a point in a three dimensional stress system are defined as: **07**

σ_{xx} = 20 N/mm^2, σ_{yy} = -40 N/mm^2 , σ_{zz} = 80 N/mm^2

T_{xy}= 40 N/mm^2, T_{yz}= -60 N/mm^2, T_{zx}= 20 N/mm^2.

Determine the principal stresses at a given point.

Q.5 **(a)** State and derive an equation of a Castiglione's Force theorem $F = \partial U/\partial \Delta$ with usual notation. **07**

(b) A fix beam of 5 m is subjected to a central point load of 100 kN. Find out fix end moment using Theorem of Least Work. **07**

OR

Q.5 **(a)** State and explain the "Theorem of Least Work" by giving suitable example. **07**

(b) Find out horizontal displacement at free end for a semicircular frame as shown in fig.-5, using Castigliano's theorem. Take E= 2 x 10^5 N/mm^2, I = 3 x 10^8 mm^4. **07**

****

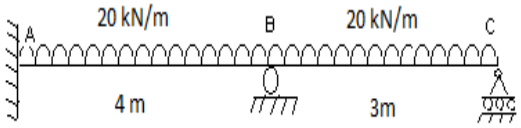

Fig.1

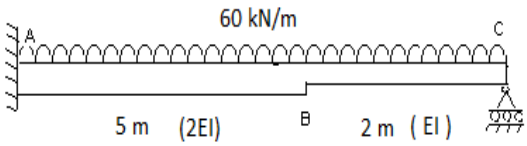

Fig.-2

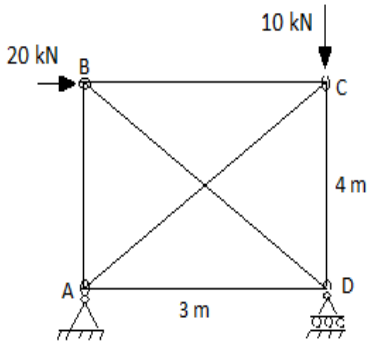

Fig.-3

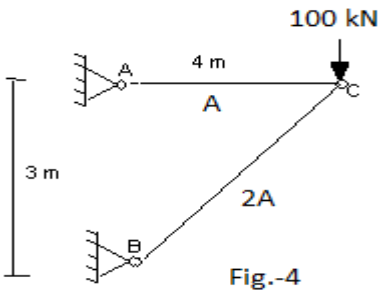

Fig.-4

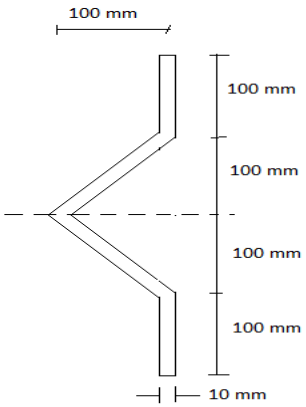

Fig.-6

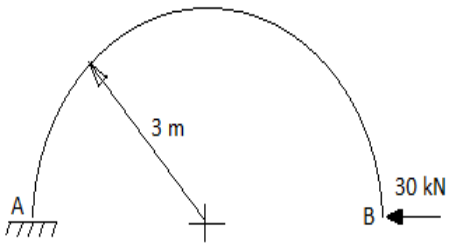

Fig.-5