Seat No.: _____ Enrolment No._____

GUJARAT TECHNOLOGICAL UNIVERSITY

BE - SEMESTER–VI • EXAMINATION – SUMMER • 2014

Subject Code: 160104 **Date: 28-05-2014**

Subject Name: Basic Control Theory

Time: 10:30 am - 01:00 pm **Total Marks: 70**

Instructions:

1. **Attempt all questions.**
2. **Make suitable assumptions wherever necessary.**
3. **Figures to the right indicate full marks.**

Q.1 **(a)** Explain open loop and closed loop system with block diagram. Write down their advantages, disadvantages and applications. **07**

(b) Using Mason's Gain Formula, Find the transfer function C(S)/R(S) for the Signal Flow Graph shown in Figure (a). **07**

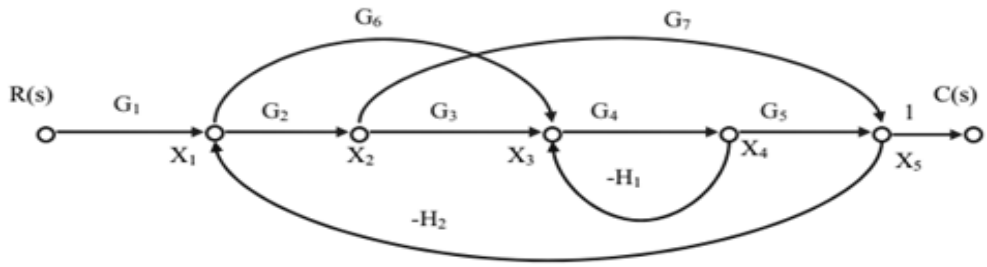

Figure (a)

Q.2 **(a)** What is transfer function? Write down its advantages and disadvantages. Find the transfer function $e_0(s)$ / ei(s) of network as shown in Figure (b). **07**

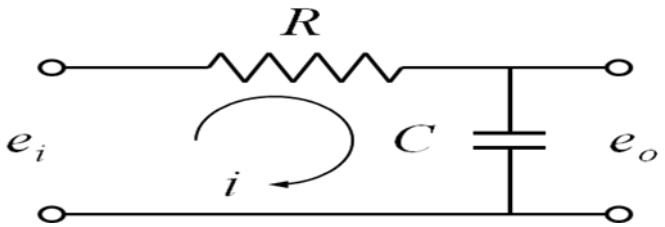

Figure (b)

(b) Reduce the Block Diagram to its Simple Form and obtain C(S)/R(S) (Refer Figure(c)). **07**

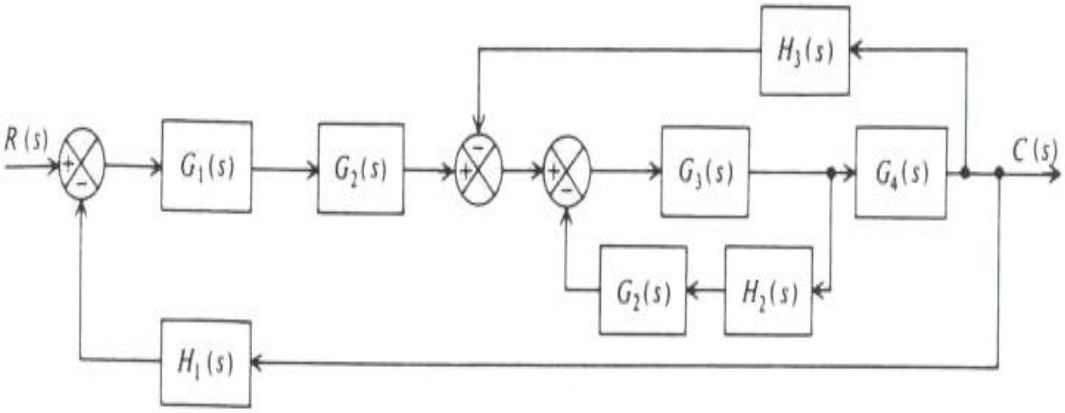

Figure (c)

OR

(b) For the mechanical system shown in figure (d), (I) Draw the node diagram (II) Write System equations of performance (III) Draw Force to Voltage analogous circuit. **07**

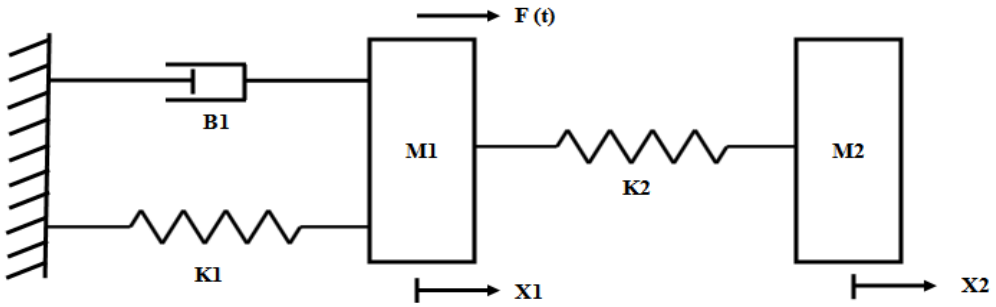

Figure (d)

Q.3 **(a)** Which are the standard test inputs signals used in control system? Explain transient response specification with help of diagram. **07**

(b) Find K_P, K_V, K_a and steady state error for a system with open loop transfer function as $\frac{10(s+2)(s+3)}{s(s+1)(s+5)(s+4)}$ where the input is $r(t) = 3 + t + t^2$. **07**

OR

Q.3 **(a)** Derive the overall Transfer Function of armature controlled DC servomotor with block diagram. **07**

(b) Definition (I) Control System (II) Continuous Control System (III) State (IV) State Variable (V) Linear system (VI) Non Linear system (VII) Marginally Stable System. **07**

Q.4 **(a)** A unity feedback control system has $G(s)\,H(s) = \frac{80}{s(s+2)(s+20)}$. Sketch the Bode plot and find Gain cross over frequency, Phase cross over frequency, Gain Margin, Phase Margin. Comment on the stability. **07**

(b) Draw polar plot for $G(s)\,H(s) = \frac{1}{s(1+T1s)(1+T2s)}$. **07**

OR

Q.4 **(a)** State the rules for constructing the Root Locus. **07**

(b) For a certain control system $G(s)\,H(s) = \frac{K}{s(s+2)(s+10)}$. Sketch the Nyquist Plot and calculate the range of values of K for stability. **07**

Q.5 **(a)** Comparison between Modern Control Theory and Conventional Control Theory. **07**

(b) Write MATLAB program to draw pole zero map, Nyqusit Plot, Root Locus and Bode Plot for $G(s)\,H(s) = \frac{s+5}{s^2+3s+2}$ **07**

OR

Q.5 **(a)** Co-relate the Time domain specifications and Frequency domain specifications for the second order system. **07**

(b) A second order system has a natural frequency of oscillation Wn = 3.0 rad/sec and undamped frequency of oscillation Wd = 2.5 rad/sec. (I) Calculate its percentage overshoot, when it is subjected to a step input (II) Calculate the resonant peak, if it is subjected to sinusoidal input. **07**

****