Seat No.: _____ Enrolment No._____

GUJARAT TECHNOLOGICAL UNIVERSITY

BE - SEMESTER–VI • EXAMINATION – SUMMER • 2014

Subject Code: 161903 **Date: 23-05-2014**

Subject Name: Computer Aided Design

Time: 10:30 am - 01:00 pm **Total Marks: 70**

Instructions:

1. **Attempt all questions.**
2. **Make suitable assumptions wherever necessary.**
3. **Figures to the right indicate full marks.**

Q.1 **(a)** Write down differences between **04**

i) Raster Scan and Vector Scan Displays

ii) Analytic curves and Synthetic curves

(b) Identify the pixel locations that will be chosen by the DDA algorithm while scan converting a line from screen coordinate (10, 30) to (19, 36). **05**

(c) A triangle ABC having coordinates A(15, 15), B(25, 25) and C(15, 35) is rotated by 30° clockwise about the vertex B. Determine the new vertex positions after rotation. **05**

Q.2 **(a)** A Bezier curve is to be constructed using control points P_0(35, 30), P_1(25, 0), P_2(15, 25) and P_3(5,10). The Bezier curve is anchored at P_0 and P_3. Find the equation of the Bezier curve and plot the curve for u= 0, 0.2, 0.4, 0.6, 0.8 and 1. **07**

(b) A rectangle ABCD having vertices A(10,15), B(25, 15), C(25, 25) and D(10, 25) is to be reflected about a line passing through points P(25, 20) and Q(10, 30). Determine the vertices of the reflected rectangle. **07**

OR

(b) A tetrahedron is defined by points A(10, 15, 20), B(30, 15, 20), C(10, 25, 20) and D(20, 20, 50). Calculate the new coordinates of the tetrahedron, if it is rotated about X axis by 60° in CCW direction followed by rotation about Y axis by 45° in CCW direction. **07**

Q.3 **(a)** Write a short note on wire frame model. **04**

(b) Derive from fundamentals the parametric equation for the Hermite Cubic spline. Represent the equation in matrix form. **05**

(c) Develop the parametric equations for i) line ii) Circle iii) Ellipse **05**

OR

Q.3 **(a)** Prepare the detailed specifications for a typical CAD workstation with latest hardware. **04**

(b) Write short note on Constructive Solid Geometry (CSG). **05**

(c) Write note on Data transfer for CAD-CAM interfacing. **05**

Q.4 (a) Derive the Potential Energy equation for the spring system shown in figure 1. Determine the displacements of nodes of the same using the minimum potential energy principle. Take $k_1 = k_2 = 40$ N/mm, $k_3 = 60$ N/mm, $k_4 = 90$ N/mm, $P_2 = 100$ N and $P_3 = 60$ N. **07**

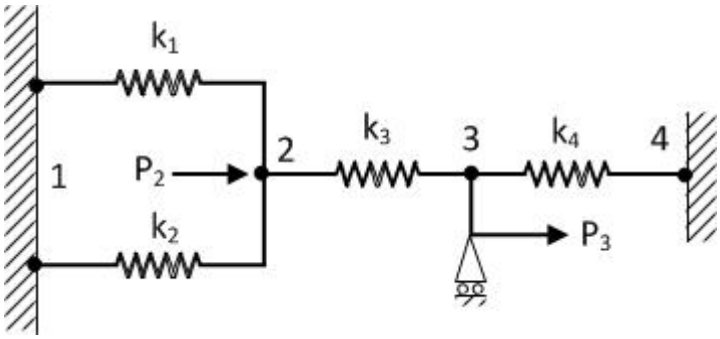

Figure 1

(b) Determine the displacements of nodes and elemental stresses for the bar as shown in figure 2. Take: $A_1 = 400$ mm^2, $A_2 = 500$ mm^2, $l_1 = l_2 = 200$ mm, $l_3 = 250$ mm, $P_1 = P_2 = 10$ kN and E = 200 GPa. **07**

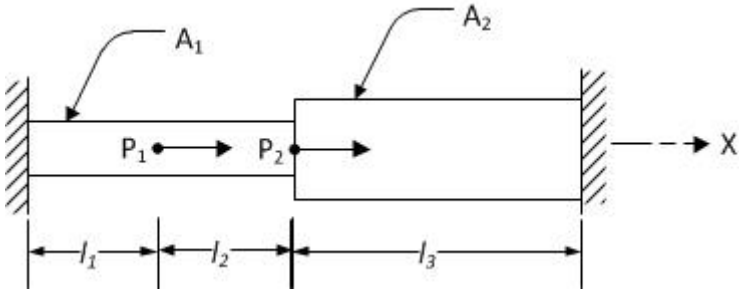

Figure 2

OR

Q.4 (a) Determine the displacements of nodes for the bar as shown figure 3. Take $P_2 = P_3 = 20$ kN, $\Delta T = 30\ ^oC$. **07**

Use the following data.

Element	Area (mm^2)	Length (mm)	E (GPa)	α (per ^oC)
1	1000	400	80	23×10^{-6}
2	600	300	200	12×10^{-6}
3	1000	400	80	23×10^{-6}

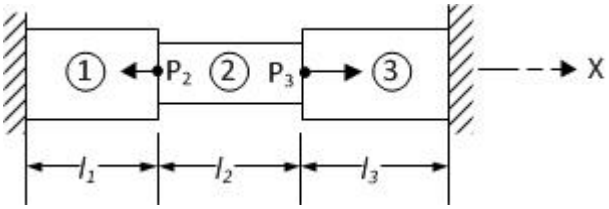

Figure 3

(b) Consider the bar shown in figure 4. Determine the nodal displacement and elemental stresses. Apply boundary conditions using penalty approach. Take P = 60 kN. **07**
Use following data.

Element	Area (mm^2)	Length (mm)	E (GPa)
1	100	250	80
2	200	250	200

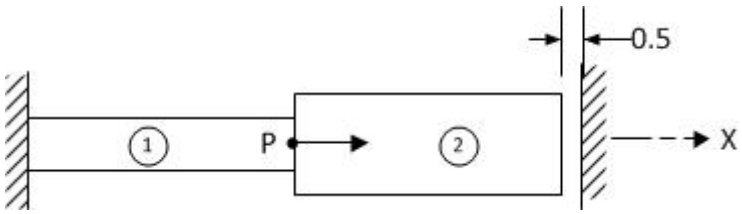

Figure 4

Q.5 **(a)** Explain the steps involved in the solution of static structural problem using finite element method. **03**

(b) Sketch 2D and 3D elements used in FEA with usual notations. **03**

(c) Explain the following with reference to optimization: **08**

i) Objective function
ii) Constraints
iii) Linear Programming Problem (LPP)
iv) Non-linear Programming Problem (NLPP)

OR

Q.5 **(a)** A manufacturer produces two types of machine parts, P1 and P2, using lathes and milling machines. The machining time required by each part on the lathe and the milling machine and the profit per unit of each part are given below: **07**

Machine part	Machining time (Hrs/piece)		Profit per unit
	Lathe	Milling	
P1	5	2	Rs. 200
P2	4	4	Rs. 300

If the total machining times available in a week are 500 hrs on lathe and 400 hrs on milling machines, determine the number of units of P1 and P2 to be produced per week to maximize the profit.

(b) An uncovered rectangular water tank with a square base is to be lined with sheet copper. If the tank is to hold 1000 litre of water, find the dimensions of the tank for minimum amount of copper. Also find the surface area of tank. **07**

****