Seat No.: _____ Enrolment No._____

GUJARAT TECHNOLOGICAL UNIVERSITY

BE - SEMESTER–VI • EXAMINATION – SUMMER • 2014

Subject Code: 161905 **Date: 26-05-2014**

Subject Name: Control Engineering

Time: 10:30 am - 01:00 pm **Total Marks: 70**

Instructions:

1. **Attempt all questions.**
2. **Make suitable assumptions wherever necessary.**
3. **Figures to the right indicate full marks.**

Q.1 **(a)** Explain the open-loop operation of traffic signals at a road crossing. How can improved traffic control be achieved by means of a closed-loop scheme? What are the advantages and disadvantages of open loop and closed loop systems? **07**

(b) Write the differential equations governing the mechanical system. Derive transfer function of $x_1(s)/F(s)$. **07**

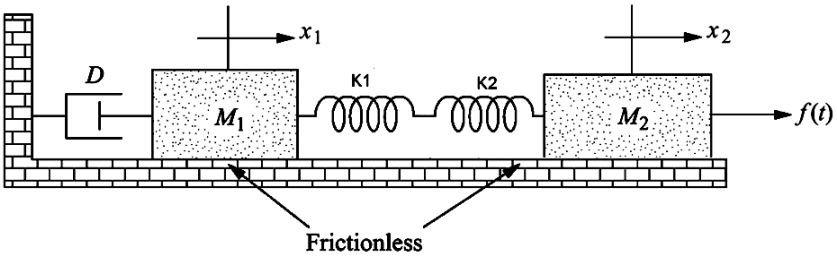

Q.2 **(a)** Derive a transfer function for a liquid level system. Explain resistance and capacitance of any liquid level system. **07**

(b) Obtain transfer functions C(s)/R(s) of the system as shown in figure. State the initial step before obtaining the transfer function. **07**

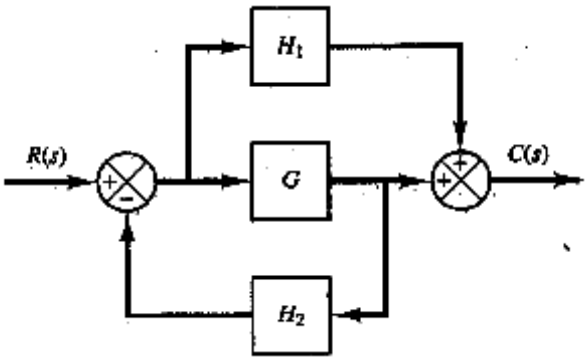

OR

(b) Determine the transfer function *C(s)/R(s)* for the system shown in figure using Mason's gain formula. **07**

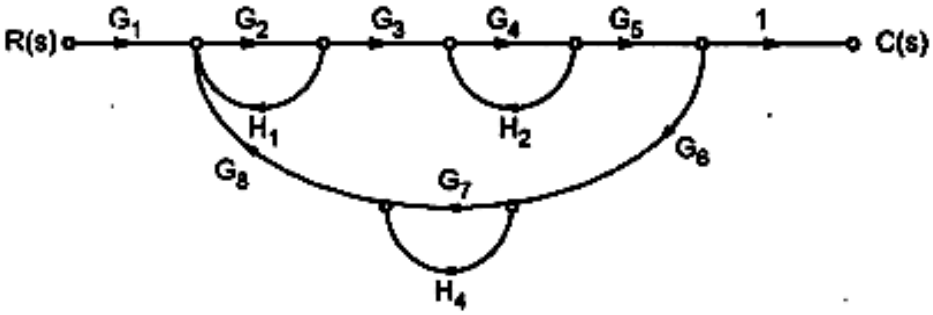

Q.3 **(a)** Draw a schematic diagram & block diagram for a hydraulic proportional plus derivative control system. Derive expression for transfer function for above mentioned hydraulic PD control systems. Explain how this can be converted to PID controller **07**

(b) What is FRL unit in pneumatic system? Write about pneumatic power sources. State various components used in pneumatic circuit. **07**

OR

Q.3 **(a)** Compare between hydraulic and pneumatic control systems. **07**

(b) Describe the working of a force distance type pneumatic proportional controller and its transfer function. **07**

Q.4 **(a)** Sketch the root locus plot of the system with **07**

$$G(s) = \frac{K}{s(s+1)(s+2)}, \qquad H(s) = 1$$

(b) Explain unit step response of first order linear time invariant systems. **07**

OR

Q.4 **(a)** Using the Routh-Hurwitz criterion for simple design problems, consider that the characteristic equation of a closed-loop control system is **07**

$$s^3 + 3Ks^2 + (K+2)s + 4 = 0$$

Determine the desired range of K so that the system is stable.

(b) Explain following terms in regard to transient response specification of second order control system using neat sketch. **07**

- Delay time t_d
- Rise time t_r
- Peak time t_p
- Maximum overshoot M_p
- Settling time t_s

Q.5 **(a)** State applications of fuzzy control. Explain following terms, **07**

- Fuzzification
- Fuzzy sets
- Fuzzy membership functions

(b) Explain boiler feed control system using neat sketch. **07**

OR

Q.5 **(a)** Draw equivalent mechanical and electrical systems to relate force voltage or force current analogy. **07**

(b) What do you mean by micro-porocessor based digitial control. What is PLC? State its industrial applications. **07**

****