Seat No.: _____ Enrolment No._____

GUJARAT TECHNOLOGICAL UNIVERSITY
BE - SEMESTER–VII • EXAMINATION – SUMMER • 2014

Subject Code: 170901 **Date: 22-05-2014**

Subject Name: Interconnected Power Systems

Time: 02:30 pm - 05:00 pm **Total Marks: 70**

Instructions:

1. **Attempt all questions.**
2. **Make suitable assumptions wherever necessary.**
3. **Figures to the right indicate full marks.**

Q.1 (a) Prove that in a Y_{BUS} matrix, the off diagonal elements are negative of the transfer admittance connected between the two buses, while the diagonal elements are sum of all admittances connected to that bus (7)

(b) What is power angle curve? Draw power angle for synchronous generator and motor Also define steady state, transient and dynamic stability. (7)

Q.2 (a) Explain cascade tripping and network islanding in brief (7)

(b) What is penalty factor? Discuss the criteria for economic dispatch when losses of of the system are considered (7)

OR

(b) With the help of neat diagram explain turbine speed governing system (7)

Q.3 (a) A synchronous machine having a voltage of $0.9\angle 10^0$ is and having reactance of j0.3 pu is connected to an infinite bus having a voltage of $1\angle 0^0$. Determine whether synchronous machine (6)

(i) is working as a generator or motor?

(ii) is absorbing active power or delivering active power to the bus?

(iii) is absorbing reactive power or delivering reactive power to the bus?

(iv) is working at leading p.f. or lagging p.f.?

Support your answer with valid reasons

(b) Discuss the dynamics of synchronous machine and hence derive the swing equation (8)

OR

Q.3 (a) Explain equal area criteria of stability (6)

(b) A power deficient area receives 50 MW over a tie line from another area. The maximum steady state capacity of the line is 100 MW. Find the allowable sudden load that can be switched on without the loss of stability (8)

Q.4 (a) Obtain Y_{BUS} matrix for the system shown in figure (7)

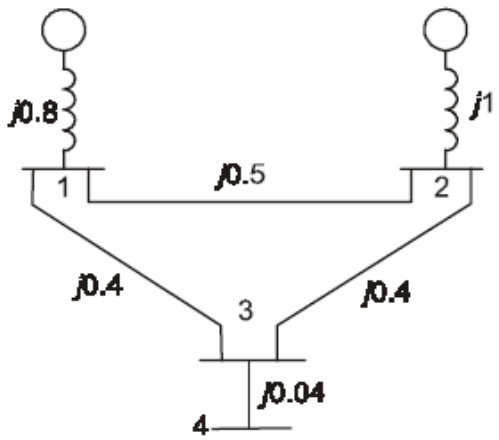

(b) Compare NR and GS method of load flow (7)

OR

Q.4 (a) A constant load of 300 MW is supplied by two 200 MW generators 1 and 2 for which the respective fuel costs in Rs/hr are (4)

$dF_1/dP_1 = 0.10P_1 + 20$; $dF_2/dP_2 = 0.12P_2 + 15$

Determine (i) the most economical division of load (ii) the savings in Rs/day thereby obtained as compared to equal load sharing between the machines

(b) Figure shows a system having two plants 1 and 2 connected to buses 1 and 2. There two loads and a network of four branches. The branch currents and impedances are (10)

$I_1 = 4 - j1$ pu, $I_2 = 3.2 - j0.8$ pu, $I_3 = 7.2 - j1.8$ pu $I_4 = 2 - j0.5$ pu,

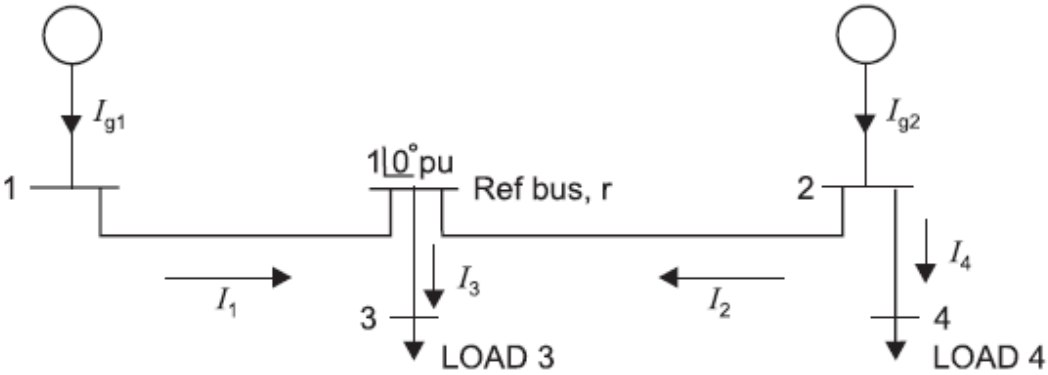

$Z_1 = 0.02 + j0.08$ pu, $Z_2 = 0.02 + j0.08$ pu, $Z_3 = 0.01 + j0.04$ pu, $Z_4 = 0.01 + j0.04$ pu.

Calculate the loss coefficients of the system in pu.

Q.5 (a) Discuss the algorithm for formulating Z_{BUS} matrix of system (10)

(b) In the equation $Y_{BUS} = A^T YA$, what are matrices Y and A? Also mention their dimensions (4)

OR

Q.5 (a) Explain point by point method of stability in detail (10)

(b) A 100 MVA synchronous generator operates on full load at a frequency of 50 Hz A 40 MW load is suddenly removed from the system. Due to time lag in the governor system, the steam valve begins to close after 0.5 seconds. Determine the change in frequency that occurs in this time. Assume H = 5 MJ/MVA (4)

****