Seat No.: _____ Enrolment No._____

GUJARAT TECHNOLOGICAL UNIVERSITY

BE - SEMESTER–VIII • EXAMINATION – SUMMER 2014

Subject Code: 182003 **Date: 03-06-2014**

Subject Name: Quality Assurance and Reliability

Time: 10.30 am - 01.00 pm **Total Marks: 70**

Instructions:

1. **Attempt all questions.**
2. **Make suitable assumptions wherever necessary.**
3. **Figures to the right indicate full marks.**

Q.1 **(a)** Define Quality. Explain Quality of design, Quality of conformance and Quality of performance. **07**

(b) 'Quality Control is better than Inspection. Quality assurance is better than Quality Control' and Total Quality Management is better than Quality Assurance.' Justify. **07**

Q.2 **(a)** i. The Mean Time to Failure (MTTF) is simply the reciprocal of the hazard rate, for a constant hazard model. Prove it. **03**

ii. An electronic measuring instrument has to pass a test before installation. For this, it is found that 96% of all instruments pass the test, but the test is assumed to be only 92% reliable. What is the probability that a perfect instrument will pass the test? **04**

(b) In a test involving continuous satisfactory performance of 107 valves under excessive vibration conditions, the following failure frequencies were observed, the total test period being 7 hours: **07**

Time interval (hour)	*Number of failures*	*Time interval (hour)*	*Number of failures*
0-1	3	4-5	15
1-2	11	5-6	10
2-3	22	6-7	5
3-4	41		

Tabulate the values of failure rate, failure density, reliability and probability of failure. Also calculate MTTF.

OR

(b) Calculate the reliability of the system. **07**

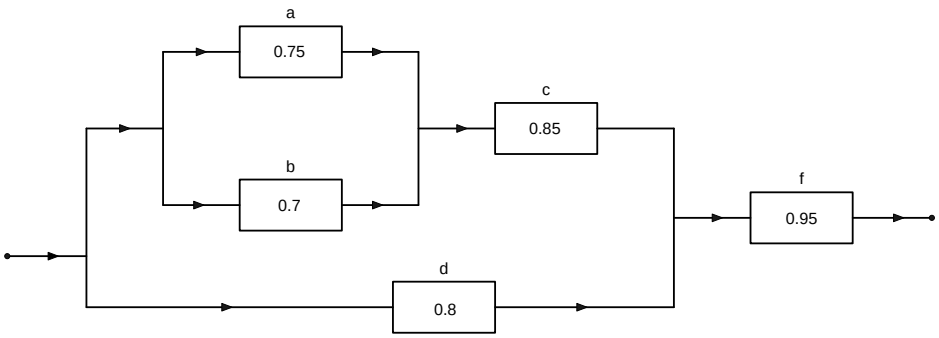

Q.3 **(a)**

1. Explain the element redundancy with suitable example. **03**
2. What do you mean by Complementary Event? Explain with at least two examples. **04**

(b) A company manufactures large number of resistors; the probability of failure of any resistor is 0.07. If a random sample of 10 resistors were taken, determine the probability of **07**

i. Getting exactly two defective resistors
ii. Getting at least three defective resistors
iii. Getting exactly five good resistors

OR

Q.3 **(a)** The functioning of a strategic experiment is monitored continuously by two observation stations, A and B, functioning independently. It is necessary that at least one of them function satisfactorily to monitor the progress of the experiment. Each of these observation stations receives power supply from two independent sources connected in parallel. A receives power from C and D, and B receives from E and F. For each observation station, the power from any one source is sufficient for operation. Draw the block diagram. Assume suitable values of reliability of each element and calculate the reliability for the system. **07**

(b)

i. Derive the expression for probability of occurrence of E or occurrence of F **03**
ii. A factory which manufactures electric bulbs has an average output of 2 million bulbs every year. Over a 5 year period, the inspection department rejects 30,000 bulbs. **04**
   a) What is the probability that any of the bulbs being checked by the inspection department will be rejected?
   b) If the inspection department detects only 70 percent of all sub-standard bulbs, what is the probability that any bulb bought by a customer will be defective?

Q.4 **(a)** For a product for which 100% inspection is carried out and the data for 16 days is as under. Calculate the control limits for a suitable chart and draw conclusion. **07**

Day	No. of units inspected	No. of defective units	Day	No. of units inspected	No. of defective units
1	48	5	9	32	5
2	36	5	10	40	2
3	50	0	11	47	2
4	47	5	12	47	4
5	48	0	13	46	1
6	54	3	14	46	0
7	50	0	15	48	3
8	42	1	16	39	0

(b) Explain the following: **07**

1. Contract Review clause of ISO9001
2. Customer supplier relationship as a key element of TQM

OR

Q.4 **(a)** Discuss various types of Audits involved in the ISO9001 certification process. **07**

(b) Explain the concept of Quality Circle in the context of overall quality improvement. **07**

Q.5 **(a)** What is pareto principle? After Sales Service department of XYZ Motors Ltd. received different types of complaints as per the following table. Construct pareto diagram and suggest suitable actions. **07**

Type of complaint	Frequency of occurrence
Abnormal Noise	10
Oil seal leakage	08
Cooling fan broken	48
Lifting lug missing	5
Excessive vibration	80
Wrong supply	6
Improper foundation plate	4
Speed variation	6
Cooling fan cover broken	14

(b) Attempt the following: **07**

1. The design specifications for a compo0nent are 100±0.5 mm, whereas the process report shows that process average is 99.9 mm and standard deviation is 0.18. Is it required to take any action? If yes what action?

2. A normal curve has an average of 140.6 and a standard deviation of 3.7. What percentage of the area under the curve will fall between limits of 135.5 and 142.5. (Refer Table A for Z values)

OR

Q.5 **(a)** Explain frequency polygon, histogram and Ogive curve. **07**

(b) Explain following: **07**

1. Fishbone Diagram
2. Cost of failure

Table A

Z value	0.09	0.08	0.07	0.06	0.05	0.04	0.03	0.02	0.01	0.00
-2.0	0.0183	0.0188	0.0192	0.0197	0.0202	0.0207	0.0212	0.0217	0.0222	0.0228
-1.9	0.0233	0.0239	0.0244	0.0250	0.0256	0.0262	0.0268	0.0274	0.0281	0.0287
-1.4	0.0681	0.0684	0.0708	0.0721	0.0735	0.0740	0.0764	0.0778	0.0793	0.0808
-1.3	0.0823	0.0838	0.0853	0.0869	0.0885	0.0901	0.0918	0.0934	0.0951	0.0968
0.4	0.6879	0.6844	0.6808	0.6772	0.6736	0.6700	0.6664	0.6628	0.6591	0.6554
0.5	0.7224	0.7190	0.7157	0.7123	0.7088	0.7054	0.7019	0.6985	0.6950	0.6915
1.1	0.8830	0.8810	0.8790	0.8770	0.8749	0.8729	0.8708	0.8686	0.8665	0.8643
1.2	0.9015	0.8997	0.8980	0.8962	0.8944	0.8925	0.8907	0.8888	0.8869	0.8849
1.6	0.9545	0.9535	0.9525	0.9515	0.9505	0.9495	0.9484	0.9474	0.9463	0.9452
1.7	0.9633	0.9625	0.9616	0.9608	0.9599	0.9591	0.9582	0.9573	0.9564	0.9554
1,8	0.9706	0.9699	0.9693	0.9686	0.9678	0.9671	0.9664	0.9656	0.9649	0.9641
1.9	0.9767	0.9761	0.9756	0.9750	0.9744	0.9738	0.9732	0.9726	0.9719	0.9713

****