Seat No.: _____ Enrolment No._____

GUJARAT TECHNOLOGICAL UNIVERSITY

BE - SEMESTER– 1st / 2nd (OLD SYLLABUS) EXAMINATION – SUMMER 2015

Subject Code: 110010 **Date: 18/06/2015**

Subject Name: Mechanics of Solids

Time: 02.30pm-05.00pm **Total Marks: 70**

Instructions:

1. **Attempt any five questions.**
2. **Make suitable assumptions wherever necessary.**
3. **Figures to the right indicate full marks.**

Q.1 **(a)** Find the resultant force of the following forces: **07**

(i) 60 N force due south
(ii) 40 N force from East
(iii) 25 N force due south-East
(iv) 80 N force 30 west of south.

(b) Differentiate following terms giving proper illustration. **07**

(i) Static & dynamics
(ii) Kinematics & kinetics
(iii) Rigid body & deformable body

Q.2 **(a)** Fill in the blanks with most appropriate answer. **07**

(i) 1 GPa =_____ N/mm^2. (1, 10^3,10^9)

(ii) Poisson's ratio is ratio of _____
(longitudinal to lateral strain, lateral to longitudinal strain, shear stress to shear strain)

(iii) If the ends of a body yield, the magnitude of thermal stress will _____
(a) increase, (b) decrease, (c) remain the same, (d) none of these

(iv) The resultant of two concurrent tensile forces is maximum when angle between them is _____ (a) 90° (b) 180° (c) 270° (d) 0°

(v) The reaction at the roller support of a beam is always _____
(a) vertical (b) horizontal (c) inclined (d) all of the ab

(vi) Shear force diagram for a cantilever beam carrying moment at free end is_____ (Line, rectangle, two triangles, parabola)

(vii) Bending moment diagram for a cantilever beam carrying moment at free end is _____ (Line, rectangle, two triangles, parabola)

(b) Discuss critically the assumption made in theory of Bending. **07**

Q.3 **(a)** Determine reactions at supports for the beam as shown in fig.1 **07**

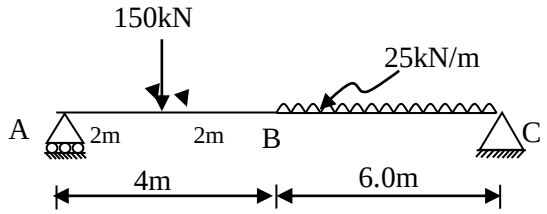

fig. 1

(b) Draw shear force and Bending moment diagram for the beam as shown in fig.1. **07**

Q.4 **(a)** A hollow circular beam having outside dia. twice the inside dia. is subjected to a bending moment of 40 KN.m. If permissible bending stress in the beam is 106 N/mm^2, find the diameter of the beam. **07**

(b) (i) Distinguish between perfect, unstable and redundant trusses. Illustrate with sketches. **07**

(ii) Explain :

(a) Type of beams with sketches.

(b) Type of loading on the beams.

(c) Type of supports and corresponding reactions.

Draw the respective sketches.

Q.5 **(a)** State and explain Pappus - Guldinus first and second theorems. **07**

(b) Derive the fundamental equation of shear stress distribution for a beam section : FAY/ Ib **07**

Q.6 **(a)** A uniform ladder of weight 300N and length 6 m is placed against a vertical wall in a position where its inclination to the vertical is 30°. A person weighing 600N climbs the ladder. At what position of the person the ladder will start to slip? Take coefficient of friction $\mu = 0.25$ at both the contact surfaces of the ladder. **07**

(b) Find the moment of inertia of the area about *x-x* axis as shown in fig. 2 **07**

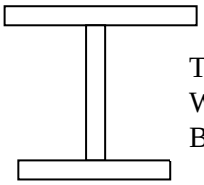

Top flange : 500 mm x 20 mm
Web : 30 mm x 400 mm
Bottom flange ; 300 mm x 20 mm

fig.2

Q.7 **(a)** Define and explain following terms: **07**

Stress, Strain, Modules of Elasticity, lateral strain, Poisson's ratio, Bulk Modulus, Modulus of rigidity.

(b) For an element shown in fig. below, find **07**

(i) Principal stresses and location of corresponding principal planes

(ii) Maximum shear stress and location of planes containing it.

Stress on each plane and each direction is 10 N/mm^2.

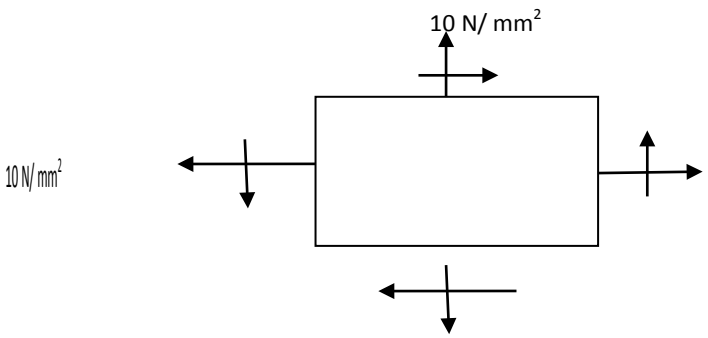

****