Seat No.: _____ Enrolment No._____

GUJARAT TECHNOLOGICAL UNIVERSITY

BE - SEMESTER– III EXAMINATION – SUMMER 2015

Subject Code: 132001 **Date: 29/05/2015**

Subject Name: Industrial Drafting

Time:02.30pm-05.30pm **Total Marks: 70**

Instructions:

1. **Attempt all questions.**
2. **Make suitable assumptions wherever necessary.**
3. **Figures to the right indicate full marks.**

Q.1 **(a)** Classify the assembly drawing. Explain any two of them. **07**

(b) Sketch neatly by giving important dimensions of Rag foundation bolt. **07**

Q.2 **(a)** Explain the use of Castle nut and Wile's lock nut with rough sketches. **07**

(b) Explain the concept of missing line and view by taking suitable example. **07**

OR

(b) Draw according to first angel projection method: **07**

- Sectional front view along A-A
- Side view from the right

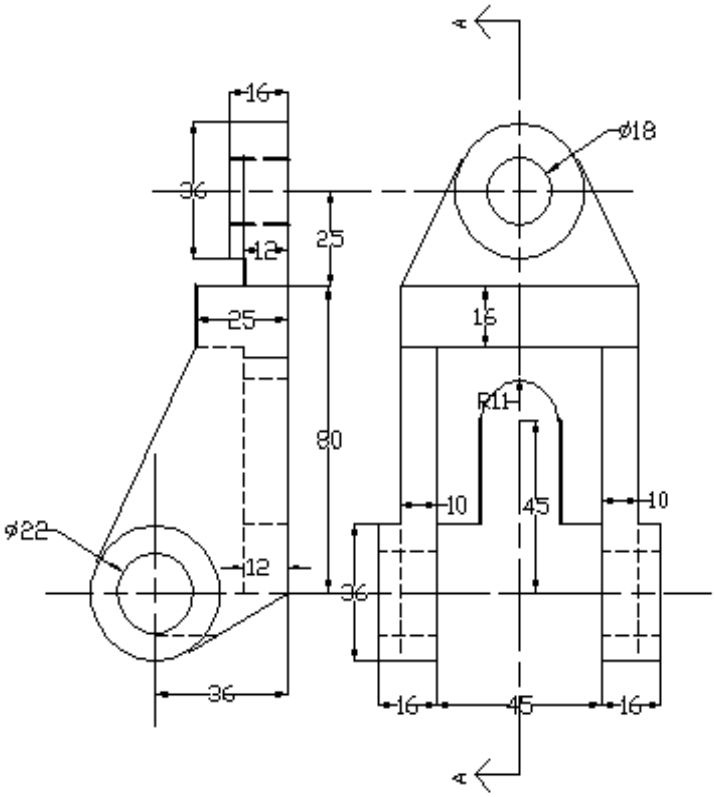

Q.3 **(a)** What is the conventional representation for indicating the sections of glass, wood, cork and zinc? **07**

(b) Draw dimensioned sketches of the following forms of screw threads: **07**

1. Acme thread
2. Buttress thread

OR

Q.3	**(a)**	What is the conventional representation for indicating the internal screw threads, bearings, interrupted views and spur gear?	**07**
	(b)	Prepare a dimensioned sketch, in two views, of a socket and spigot joint for two 25 mm diameter rods.	**07**
Q.4	**(a)**	A square prism, side of base 55 mm and height 90 mm, is resting on H.P. on its base with all rectangular faces equally inclined to V.P. It has a horizontal square hole of 30 mm side with its axis parallel to V.P. and 10mm in front of the axis of the vertical prism. Flat faces of the hole are equally inclined to H.P. Draw the projections and show the lines of intersection.	**07**
	(b)	Enlist various locking arrangement of nuts. Explain any two of them in detail with rough sketch.	**07**
		OR	
Q.4	**(a)**	Enlist the various commands available in modify tool box of AUTO CAD. Explain any two of them by giving suitable example.	**07**
	(b)	Mention the advantages and disadvantages of AUTO CAD.-	**07**
Q.5	**(a)**	With help of sketches show the following: 1. Flatness tolerance 2. Circularity tolerance 3. Angularity tolerance	**07**
	(b)	Mention various types of sectional views. Explain the revolved section with suitable example.	**07**
		OR	
Q.5	**(a)**	What is a T-bolt and how is it used?	**07**
	(b)	Explain with the aid of sketches, the use of 1. Woodruff key 2. Round key	**07**

****