Seat No.: _____ Enrolment No._____

GUJARAT TECHNOLOGICAL UNIVERSITY

BE SEMESTER-IV • EXAMINATION – SUMMER-2015

Subject Code: 140101 **Date: 01/06/2015**

Subject Name: Aircraft structure - 1

Time: 10.30am-01.00pm **Total Marks: 70**

Instructions:

1. **Attempt all questions.**
2. **Make suitable assumptions wherever necessary.**
3. **Figures to the right indicate full marks.**

Q.1 **(a)**
1. Which points should be take care while using Macaulay's Method. **07**
2. Give the relation between bending moment, shear force, rate of loading, slope and deflection.
3. State the difference between Determinate and Indeterminate Structure.

(b) Find Structural indeterminacy and Kinematic indeterminacy of the structure shown in figure 1 (a, b, c). **07**

Q.2 **(a)** Describe and explain the construction of Mohr's circle for a plane stress element. Draw all relative sketches. **07**

(b) Analyse the plane frame shown in figure 2**.** Draw shear force diagram, Bending moment diagram, and axial force diagram. **07**

OR

(b) Analyse the cantilever truss as shown in figure 3 by suitable method. **07**

Q.3 **(a)** Derive the differential equation for an elastic curve of the beam. **07**

(b) Find the slope at A, and deflection under the load for a beam as shown in figure 4 using conjugate beam Method. Take E = 200 kN/mm^2 & I = 1.25x10^9 mm^4. **07**

OR

Q.3 **(a)** Find the deflection at point 'C' and 'D' for a beam as shown in figure 5 using Macaulay's Method. Take EI = 20000 kN/m^2. **07**

(b) Find slope and deflection by double integration method: **07**
1. For simply supported beam with subjected to UDL throughout the length.
2. For cantilever beam loaded with end couple.

Q.4 **(a)** Enlist the different properties required for aircraft structures. And enlist different materials available for aircraft structure. Why I section and hollow section are most preferable as a structural element for aircraft structures? **07**

(b) Give the assumptions for Euler's buckling theory of long column. And also derive the formula for buckling load. **07**

OR

Q.4 **(a)** Draw the sketch which shows a buckle shape of a long column for following support conditions; **07**
(1) Both the ends are fixed
(2) Both the ends are free.
(3) One end fix and other end is free
(4) One end fix and other is hinged

(b) A vertical strut 6 m long, hollow circular in section with external diameter 100 mm has pinned ends. It deflects by 50 mm when a central point load of 3075 kN is applied on it in horizontal direction. Determined the crippling load on the column. **07**

Q.5 **(a)** Explain plane stress and plane strain condition with suitable examples and sketch. **07**

(b) Find the total strain energy stored in a cantilever beam of length 6 m subjected to a 15 kN load at the end. Take E = 1.8 x 10^5 N/mm^2. The cross section of beam is rectangle and of size 150 mm x 300 mm. **07**

OR

Q.5 **(a)** Enlist & explain types of loading. Derive the Strain Energy Stored in a Body, when the Load is gradually applied. **07**

(b) An axial pull of 20 kN is suddenly applied on a steel rod 2.5 m long and 1000 mm^2 in cross-section. Calculate the strain energy, which can be absorbed in the rod. Take E = 200 GPA. **07**

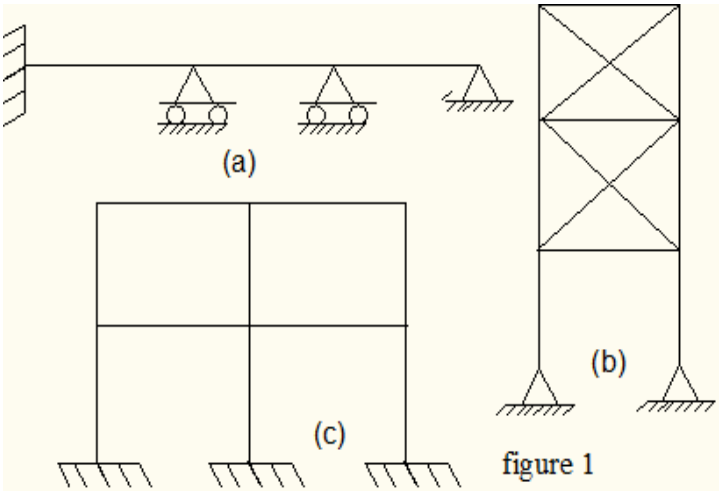

figure 1

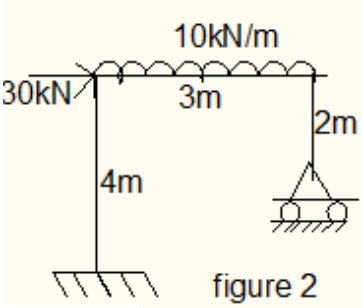

figure 2

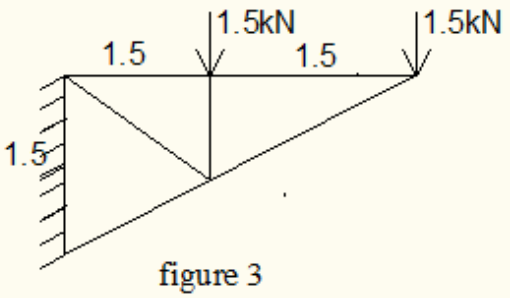

figure 3

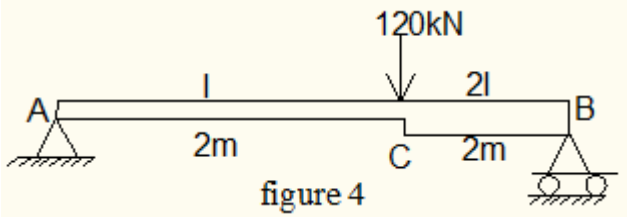

figure 4

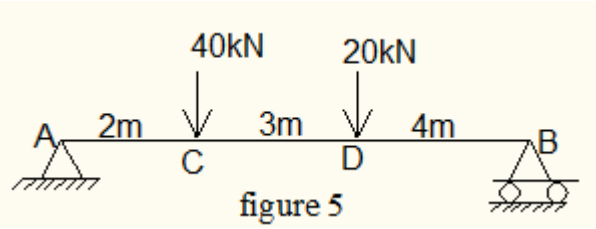

figure 5

****