Seat No.: _____ Enrolment No._____

GUJARAT TECHNOLOGICAL UNIVERSITY

BE - SEMESTER–V • EXAMINATION – SUMMER • 2015

Subject Code: 151905 **Date: 19/05/2015**

Subject Name: Machine Design-1

Time: 02.30pm-05.00pm **Total Marks: 70**

Instructions:

1. **Attempt all questions.**
2. **Make suitable assumptions wherever necessary.**
3. **Figures to the right indicate full marks.**

Q.1 **(a)** State and illustrate various principle design rules used in design for forging. **06**

(b) Explain the contact stresses between two spherical surfaces and cylindrical surfaces. **05**

(c) Describe the series of preferred numbers. **03**

Q.2 **(a)** Explain the characteristics of spring materials and enlist the spring materials. **04**

(b) Explain surge in spring. **03**

(c) A rotating shaft subjected to a non rotating force of 5 kN and simply supported between two bearings A and E as shown in fig 1.0. The shaft is machined from plain carbon steel 30C8 ($\sigma_{ut} = 500 N/mm^2$)and the expected reliability is 90 %. The equivalent notch radius at the fillet section can be taken as 3 mm. Fillet section can be taken as 3 mm. What is the life of the shaft. Bending moment at section B is 642.9 kN.mm; surface finish factor =0.79; size factor = 0.85; reliability factor = 0.897; stress concentration factor = 1.72; notch sensivity = 0.78. **07**

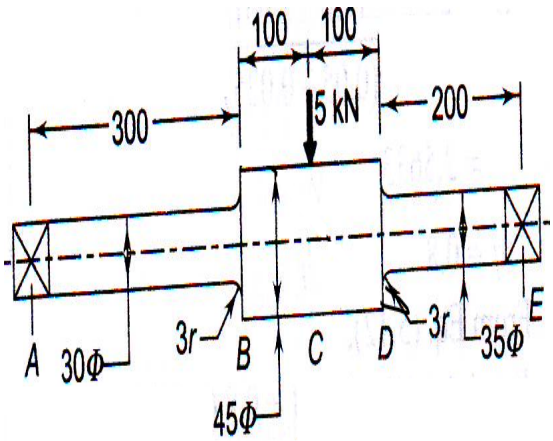

Fig 1.0 All dimensions in mm

OR

(c) A circular bar 500 mm length is supported freely and its two ends. It is acted upon by a central concentrated cyclic load having a minimum value of 20 kN and a maximum value of 50 kN. Determine the diameter of bar by taking factor of safety 1.5; size effect of 0.85; surface finish factor of 0.9; The material properties of bars are given by: ultimate strength of 650 MPa, yield strength of 500 MPa and endurance strength of 350 MPa. **07**

Q.3 **(a)** It is required to select a flat belt drive for a compressor running at 720 rpm, which is driven by a 25 kW, 1440 rpm motor. Space is available for a centre distance of 3 m. The belt is open type. The load correction factor for the compressor is 1.3; The corrected belt rating is 0.0438 kW. Find out the power capacity of the belt. **07**

(b) A chain drive is to be used to transmit 5 kW power from an electric motor running at 500 rpm. The service factor for conditions involve light shock K_s= 1.3; tooth correction factor K_1=1; multiple strand factor K_2=1; The dimensions of the chain are as follows: pitch of the chain (p)=15.875 mm, roller diameter(d)=10.16 mm; width=9.52 mm, Breaking strength(F_b)=21700 N. Determine:(i) the pitch circle diameters of the driving and driven sprockets;(ii) the number of links and length of the chain (iii) specify the Exact center distance between the axes of the sprockets (iv) the percentage speed variation. **07**

OR

Q.3 (a) Explain in detail the selection procedure of V belts from the catalogue of the manufacturer. **07**

(b) 10 mm 6×7 fibre core wire ropes of tensile designation 1770 are used to raise the construction elevator to a height of 20 m which carries the construction material. The maximum load to be raised is 10 kN, The maximum acceleration of the elevator is 1.2 m/s^2. The allowable bearing pressure between the wire rope and the sheave is 0.001 S_{ut}. If the factor of safety required against static failure is 4, determine (i) tensile load on wire rope;(ii) number of wire ropes based on fatigue failure (iii) bending load and breaking strength; (iv) Factor of safety based on static strength. Mass per unit run length of wire rope is 0.357 (kg/m), sheave diameter, D=72d; factor of safety against fatigue failure is 1.0, d_w=d/9, A=0.380d^2; E= 97000 N/mm^2. **07**

Q.4 (a) A compound cylinder consists of an inner steel tube with inner and outer diameters of 40 mm and 60 mm respectively. It is reinforced by shrinking a steel jacket of outer diameter 80 mm. The compound cylinder is subjected to an internal pressure of 60MPa. The shrinkage allowance is such that the maximum circumferential stress in inner tube and jacket are same. Calculate: (i)The interference pressure; and (ii) the original dimensions of inner tube and jacket. **07**

(b) Explain Petroff's equation for hydrodynamic journal bearings. **04**

(c) Explain the design procedure for hydrodynamic journal bearings. **03**

OR

Q.4 (a) Explain the different types of end covers of used in pressure vessels. **07**

(b) A ball bearing operates on a work cycle consisting of three parts: a radial load of 3000 N at 720 rpm for 30 % of the cycle, a radial load of 7000 N at 1440 rpm for 40 % of the cycle, and a radial load of 5000 N at 900 rpm for the remaining of the cycle. The basic dynamic capacity of the bearing is 30700 N. Calculate: (i) The rating life of bearing in hours; (ii) The average speed of rotation; (iii) The life of bearing with 95 percent reliability. **07**

Q.5 (a) An industrial diesel engine develops 25 kW at 1000 rpm. The power is to be taken through a single plate clutch at the flywheel end. Design the clutch completely from the following data: Mean diameter of clutch=360 mm, Coefficient of friction, $\mu = 0.25$ No of springs=6, Spring Index=5, Modulus of rigidity G=84000 MPa, Shear stress $\tau = 350$ MPa. Assume that 20% of addition force produces a deflection of 3 mm during disengagement. Also find driving shaft diameter. **07**

(b) A Centrifugal clutch is to be designed to transmit 20 kW power at 900 rpm. The shoes are four in number. The speed at which the engagement begins is 80% of the running speed. The inner diameter of the drum is 325 mm and the radial distance of the centre of gravity of shoe from the axis of rotation of the spider in the engaged position is 140 mm. The angle of contact subtended by friction lining of shoe at the centre of the spider is 40^0.If the coefficient of friction is 0.25 and the maximum permissible pressure intensity is 0.1 N/mm^2, determine: (i) Mass of each shoe and (ii) The size of the shoe. **07**

OR

Q.5 (a) A Band brake acts on the ¾ th of circumference of a drum of 450 mm diameter which is keyed to the shaft as shown in fig 2.0. The band brake provides a braking torque of 225 N.m. One end of the band is attached to a fulcrum pin of the lever and the other end to a pin 100 mm from the fulcrum. If the operating force applied at 500 mm from the fulcrum and the coefficient of friction is 0.25, Find the operating force when the drum rotates in the anticlockwise direction. If the brake lever and pins are to be made of mild steel having permissible stresses for tension and crushing as 70 MPa and for shear 56 MPa, design the shaft, key and lever. **07**

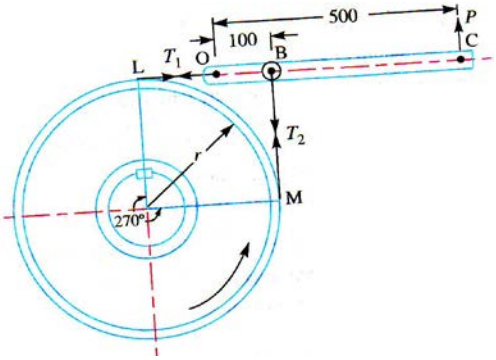

Fig 2.0 All dimensions in mm

(b) A Double block brake, as shown in fig 3.0, has a force of 1.35 kN at the end of the operating lever. If the coefficient of friction is 0.3, determine the braking torque capacity for clockwise rotation of the drum. **07**

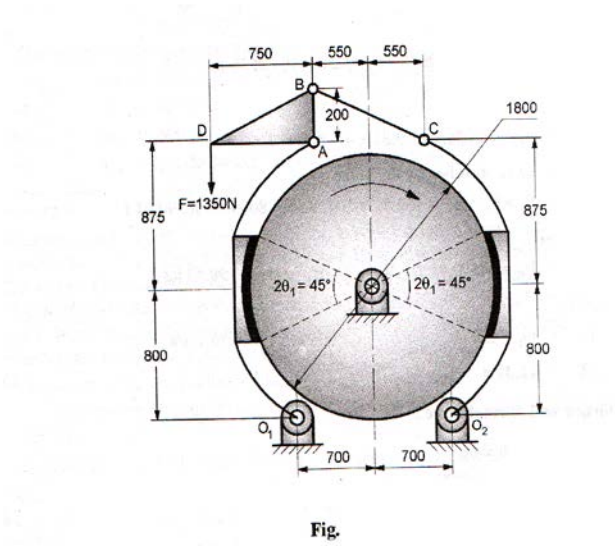

Fig 3.0 All dimensions in mm

****