Seat No.: _____ Enrolment No._____

GUJARAT TECHNOLOGICAL UNIVERSITY

BE – VI SEMESTER– • EXAMINATION – SUMMER 2015

Subject Code: 160104 **Date:14/05/2015**

Subject Name: Basic Control Theory

Time:10.30AM-01.00PM **Total Marks: 70**

Instructions:

1. **Attempt all questions.**
2. **Make suitable assumptions wherever necessary.**
3. **Figures to the right indicate full marks.**

Q.1 (a) What do you mean by Control System? Explain open loop and closed loop control system using block diagram. **07**

Q.1 (b) Using Mason's Gain Formula, Find the transfer function C(S)/R(S) for the Signal Flow Graph shown in Figure (a). **07**

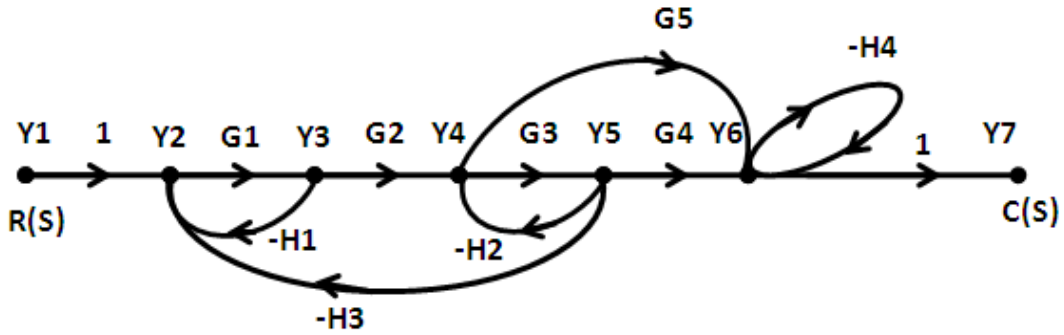

Figure (a)

Q.2 (a) Define transfer function. Write down its advantages and disadvantages. Find the transfer function Vout(s) / Vin(s) of network as shown in Figure (b). **07**

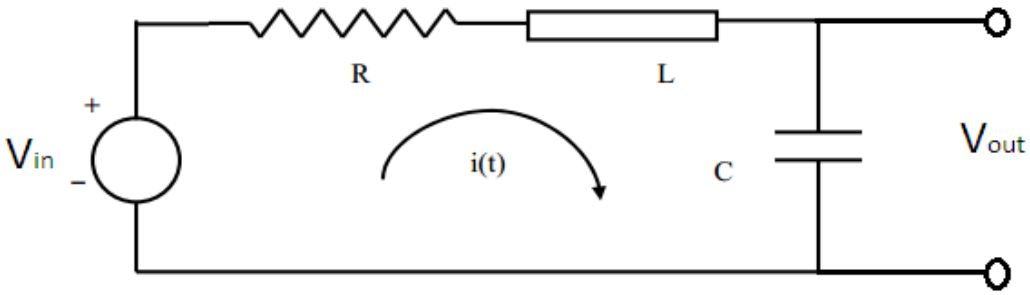

Figure (b)

Q.2 (b) For the mechanical system shown in figure (c), (I) Draw the node diagram (II) Write System equations of performance (III) Draw Force to Current analogous circuit. **07**

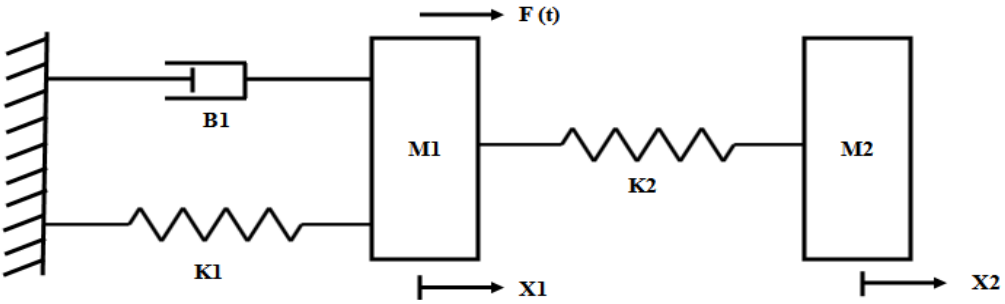

Figure (c)

OR

Q.2 (b) Reduce the Block Diagram to its Simple Form and obtain C(S)/R(S) (Refer Figure (d)). **07**

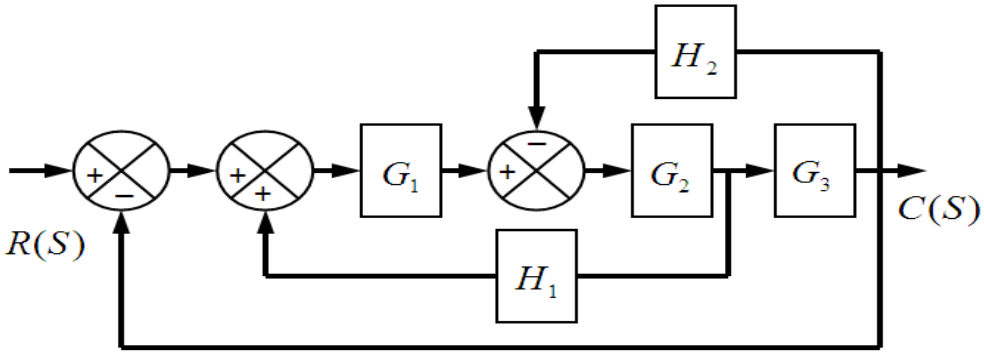

Figure (d)

Q.3 (a) Derive the overall Transfer Function of armature controlled DC servomotor with block diagram. **07**

Q.3 (b) A unity feedback system has $G(S)=\dfrac{40(S+2)}{S(S+1)(S+4)}$. Determine (i) Type of the system (ii) All error coefficients and (iii) Error for Ramp input with Magnitude = 4. **07**

OR

Q.3 (a) Explain transient response specification with help of diagram and Write down its equations. **07**

Q.3 (b) Define following Terminology. (I) Combinational Control System with example (II) Time variant System with example. (III) Continuous Time Control System (IV) Steady State Error (V) Conditionally Stable System (VI) SISO system with example (VII) MIMO system with example. **07**

Q.4 (a) Explain the calculation of Gain Margin and Phase Margin by using bode plot. Write down the stability condition for bode plot. **07**

Q.4 (b) Draw polar plot for type 2 system with transfer function $G(S)H(S)=\dfrac{1}{S^2(1+TS)}$. **07**

OR

Q.4 (a) Draw the approximate root locus diagram for a closed loop system whose loop transfer function is given by $G(S)H(S)=\dfrac{K}{S(S+5)(S+10)}$. Comment on stability. **07**

Q.4 (b) Write down steps to solve the examples by using Nyquist criterion. **07**

Q.5 (a) Write down the advantages of State Space Approach. Define (i) State Trajectory (ii) State Space (iii) State Vector. **07**

Q.5 (b) Write MATLAB program to draw pole zero map, Nyqusit Plot, Root Locus and Bode Plot for $G(S)H(S)=\dfrac{20(S+1)}{S^2(S+2)(S+5)}$. Write down MATLAB Application. **07**

OR

Q.5 (a) A unity feedback control system has $G(S)=\dfrac{B}{S(S+B)}$. (i) Determine value of B so that Maximum Overshoot is 40 Percent. (ii) For this value of B, determine Resonant Peak Value and Resonant Frequency. **07**

Q.5 (b) A unity feedback control system has $G(S)=\dfrac{K}{S(S+10)(S^2+4S+5)}$. Determine the Range of K for closed loop system to stable. **07**

****