Seat No.: _____ Enrolment No._____

GUJARAT TECHNOLOGICAL UNIVERSITY

BE - SEMESTER–VI • EXAMINATION – SUMMER • 2015

Subject Code: 162001 **Date: 01/05/2015**

Subject Name: Design of Mechanism-I

Time:10.30am-01.00pm **Total Marks: 70**

Instructions:

1. **Attempt all questions.**
2. **Make suitable assumptions wherever necessary.**
3. **Figures to the right indicate full marks.**

Q.1 Explain in detail the design steps for a Socket and Spigot Joint. Show all the failures and resisting areas by a rough sketch. Also check cotter in bending. **14**

Q.2 **(a)** What do you mean by preferred numbers and standardization? Explain by giving suitable examples. **07**

(b) Derive the expression for Torque Required to Lower the Load by Square Threaded Screws. **07**

OR

(b) Derive the expression for Torque Required to Rise the Load by Square Threaded Screws. **07**

Q.3 **(a)** Enlist assumptions made in Euler's column theory. State Euler's formula and mention the limitations of Euler's formula. Briefly explain types of End conditions of Columns. **07**

(b) A cast iron link, as shown in figure is required to transmit a steady tensile load of 35 kN, find the tensile stress including the link material at sections A-A and B-B. Conclude about the result. **07**

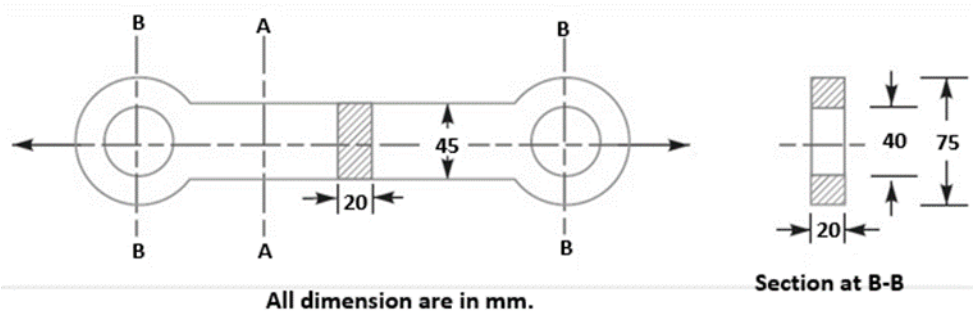

OR

Q.3 **(a)** Define load and explain the types of loads. Derive Rankine's Formula of column. **07**

(b) Explain the stress concentration. Mention various methods of reducing stress concentration by giving suitable examples. **07**

Q.4 **(a)** A bracket, as shown in Figure supports a load of 30 kN. Determine the size of bolts, if the maximum allowable tensile stress in the bolt material is 60 MPa. The distances are: L_1 = 80 mm, L_2 = 250 mm, and L = 500 mm. **07**

L1 = 80 mm, L2 = 250 mm, and L = 500 mm.

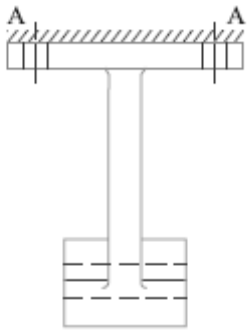

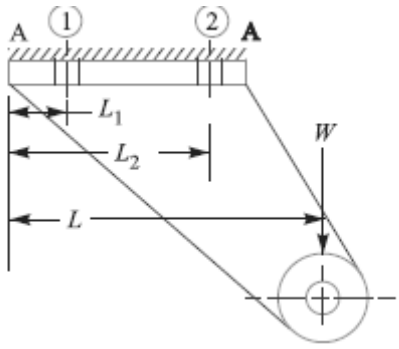

(b) Derive the expression for hoop stress, longitudinal stress and change in dimensions in context of thin cylinder. **07**

OR

Q.4 What is mechanical advantage? **14**

Design a right angled bell crank lever. The horizontal arm is 500 mm long and a load of 4.5 kN acts vertically downward through a pin in the forked end of this arm. At the end of the 150 mm long arm which is perpendicular to the 500 mm long arm, a force P act at right angles to the axis of 150 mm arm through a pin into a forked end. The lever consists of forged steel material and a pin at the fulcrum. Assume l = 1.25 d for all pins. Assume width of the lever is three times its thickness. Take the following data for both the pins and lever material:

Safe stress in tension = 75 MPa

Safe stress in shear = 60 MPa

Safe bearing pressure on pins = 10 N/mm^2

Q.5 (a) What is composite springs? Derive the relationship between spring wire diameters and spring index for composite springs. **07**

(b) A safety valve of 60 mm diameter is to blow off at a pressure of 1.2 N/mm^2. It is held on its seat by a close coiled helical spring. The maximum lift of the valve is 10 mm. Design a suitable compression spring of spring index 5 and providing an initial compression of 35 mm. The maximum shear stress in the material of the wire is limited to 500 MPa. The modulus of rigidity for the spring material is 80 kN/mm^2. Calculate: **07**

1. Diameter of the spring wire,
2. Mean coil diameter
3. Number of active turns

OR

Q.5 (a) A shaft as shown in figure is subjected to bending load of 3 KN, Pure torque of 1000 N-m and an axial pull of 15 KN. Calculate the stresses at A and B. **07**

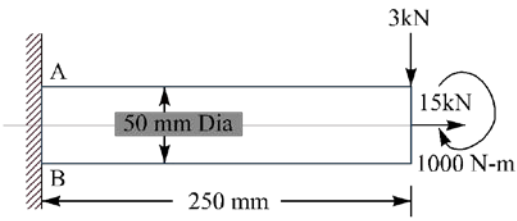

(b) A shaft made of mild steel is required to transmit 100 kW at 300 r.p.m. The supported length of the shaft is 3 metres. It carries two pulleys each weighing 1500 N supported at a distance of 1 metre from the ends respectively. Assuming the safe value of stress 60 MPa, determine the diameter of the shaft. **07**

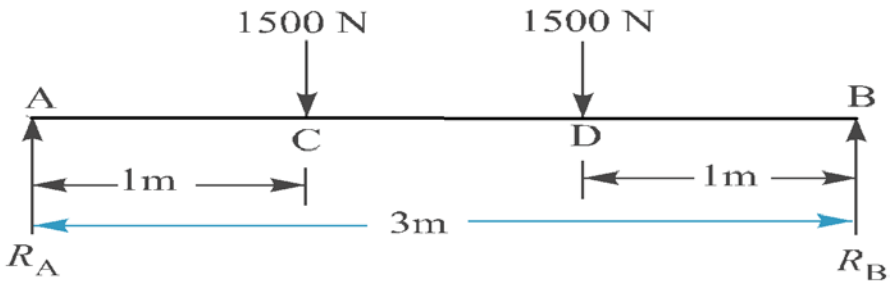

****