Seat No.: _____ Enrolment No._____

GUJARAT TECHNOLOGICAL UNIVERSITY

BE – SEMESTER VI EXAMINATION – SUMMER 2015

Subject Code: 163401 **Date: 01/05/2015**

Subject Name: Finite Element Analysis in Manufacturing Engineering

Time: 10.30am-01.00pm **Total Marks: 70**

Instructions:

1. **Attempt all questions.**
2. **Make suitable assumptions wherever necessary.**
3. **Figures to the right indicate full marks.**

Q.1	**(a)**	Derive the expressions for nodal load vector in a two noded bar element due to (a) Body force, (b) Surface load.	**07**
	(b)	Explain the penalty approach of imposing boundary conditions.	**07**
Q.2	**(a)**	Explain the elimination approach of imposing boundary conditions.	**07**
	(b)	Explain the following terms clearly (i) Nodes, primary nodes, secondary nodes and internal nodes (ii)Local coordinates, global coordinates, natural coordinates and area coordinates.	**07**
		OR	
	(b)	Discuss shape function with respect to one dimensional problem.	**07**
Q.3	**(a)**	Explain Rayleigh-Ritz method with example.	**07**
	(b)	Consider the thin (steel) plate in fig.-(1) the plate has a uniform thickness t = 1 in., young's modulus E = 30 x 10^6 psi, and weight density ρ = 0.2836 lb/in^3 . In addition to its self-weight, the plate is subjected to a pint load P = 100 lb at its mid-point. 1) Model the plate with two finite elements. 2) Write down expressions for the element stiffness matrices and element body force vectors. 3) Assemble the structural stiffness matrix K and global load vector F. 4) Using the elimination approach, solve for the global displacement vector-Q. 5) Evaluate the stresses in each element. 6) Determine the reaction force at the support.	**07**
		OR	
Q.3	**(a)**	Derive the stiffness matrix for a beam element.	**07**
	(b)	Derive the expression for consistent load vector due to self-weight in a CST element.	**07**
Q.4	**(a)**	Explain the properties of stiffness matrix K.	**07**
	(b)	Explain the potential energy approach with all force terms.	**07**
		OR	
Q.4	**(a)**	An axial load P = 300 x 10^3 N is applied at 20°C to the rod as shown in fig.-(2). The temperature is then raised to 60°C. 1) Assemble the K and F matrices. 2) Determine the nodal displacements and element stresses.	**07**
	(b)	Explain Timoshenko Beam Theory. Discuss its advantages and disadvantages.	**07**
Q.5	**(a)**	Explain the axisymmetric FEA of a pressure vessel.	**07**
	(b)	Explain the FEA simulation of solidification of castings.	**07**
		OR	
Q.5	**(a)**	Explain the application of FEM in various metals forming process.	**07**
	(b)	Explain the FEA simulation of metal cutting process.	**07**

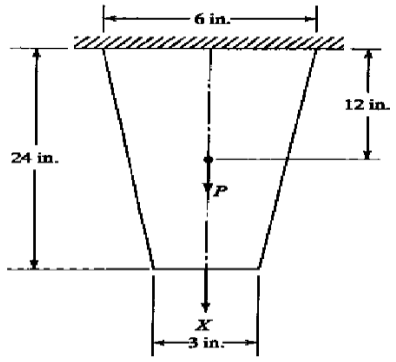

Q.3 (b) Fig.-(1)

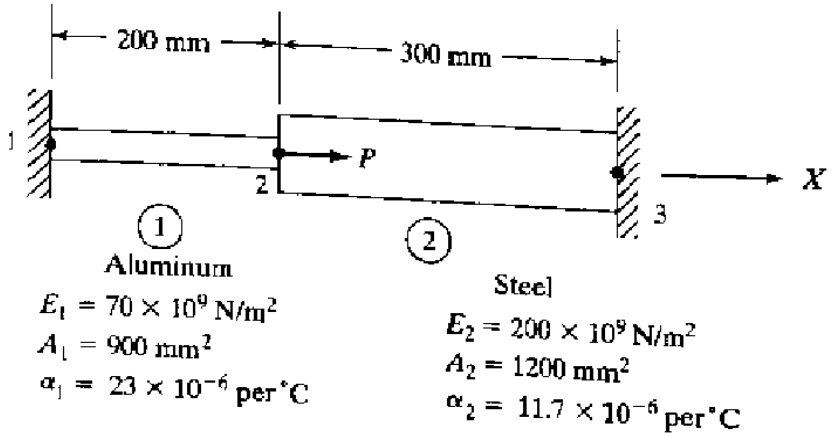

Q.4 (a) Fig.-(2) OR

****