Seat No.: _____ Enrolment No._____

GUJARAT TECHNOLOGICAL UNIVERSITY

BE - SEMESTER–VII • EXAMINATION – SUMMER • 2015

Subject Code: 170807 **Date: 06/05/2015**

Subject Name: Power System Analysis

Time:02.30pm-05.00pm **Total Marks: 70**

Instructions:

1. **Attempt all questions.**
2. **Make suitable assumptions wherever necessary.**
3. **Figures to the right indicate full marks.**

Q.1 **(a)** Give the merits and demerits of per unit system. Prove that the per-unit impedance of a transformer is the same regardless of the side from which it is viewed. **07**

(b) A generator is rated 1000 MVA, 33 kV. Its STAR connected winding has a reactance of 0.9 pu. Find: (a) Ohmic Value of reactance of winding if the generator is working in a circuit for which has bases are specified as 250 MVA, 22 kV.
(b) The p.u. reactance of generator winding on the specified base. **07**

Q.2 **(a)** With the simplifying assumptions explain the SC transient on a transmission line and hence prove that : **07**

I_{mm} (max. possible) = $2[\sqrt{2}V / |Z|]$; i.e. Doubling Effect

Also draw necessary waveforms to explain doubling effect.

(b) (i) Classify different faults which occur in the power systems. Which of these are the most frequent? **04**

(ii) Explain different types of current limiting reactors. **03**

OR

(b) For the Radial Network shown in figure 1, a 3-phase fault occurs at **F.** Determine the Fault Current and Line Voltage at 11 kV bus under fault conditions. **07**

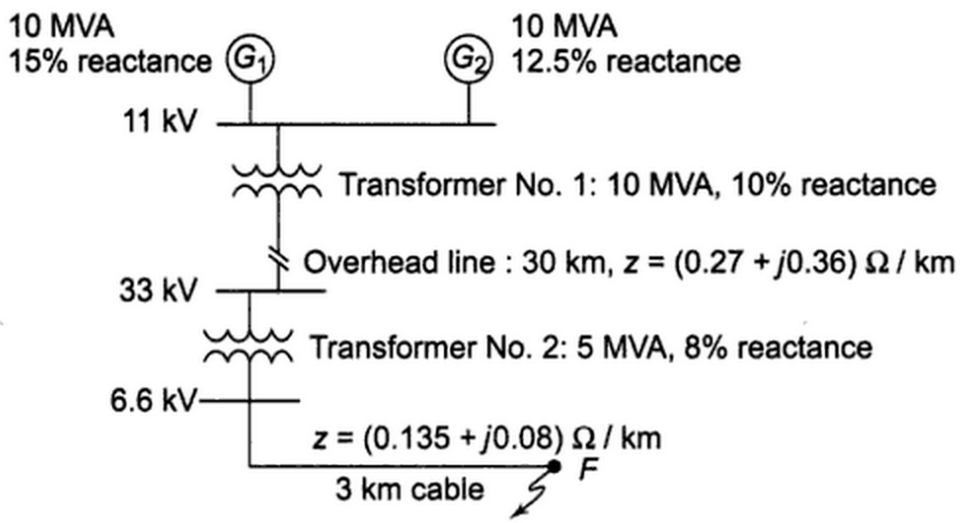

Figure 1

Q.3 **(a)** Explain the Z_{BUS} formulation techniques. Also mention all the modifications in Z_{BUS} formation. **07**

(b) Figure 2 shows the one-line diagram of a simple Four-Bus system. Table 1 gives the line impedances identified by the buses on which these terminate. **07**

The Shunt admittance at all the buses is assumed to be negligible.

(a) Find Y_{BUS} , assuming that the line shown dotted is not connected.

(b) What modifications need to be carried out in Y_{BUS} if the line shown dotted is connected?

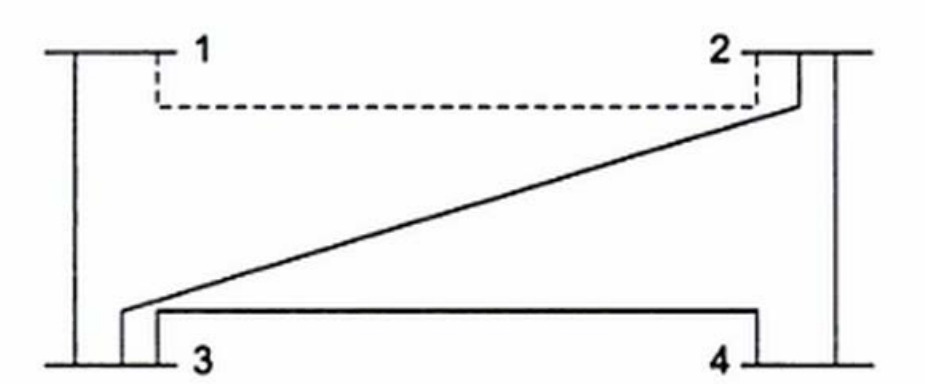

Figure 2

Line, Bus-Bus	**R, *pu***	**X, *pu***
1-2	0.05	0.15
1-3	0.10	0.30
2-3	0.15	0.45
2-4	0.10	0.30
3-4	0.05	0.15

Table 1

OR

Q.3 **(a)** Discuss principle of symmetrical components. Derive the necessary equations to convert: (i) phase quantities into symmetrical components (ii) Symmetrical components in to phase quantities. **07**

(b) A delta connected balanced resistive load is connected across an unbalanced three phase supply as shown in figure 3. With currents line A and B specified. Find the symmetrical components of line currents. **07**

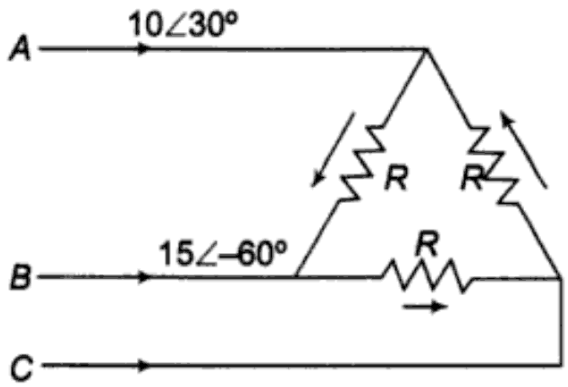

Figure 3

Q.4 **(a)** Explain single line-to-ground fault. Write terminal conditions at fault location. Derive expression of fault current and draw the connection of sequence networks. **07**

	(b)	A 25 MVA, 11 kV alternator with solidly grounded neutral has a sub-transient (positive sequence) reactance of 0.2 p.u. the negative and zero sequence reactances are 0.3 and 0.1 p.u. respectively. Determine the Sub-transient current in the generator and the Line-Line voltages for the sub-transient conditions when a LG fault occurs at the generator terminals. Assume that before the occurrence of the fault, the generator is operating at no load at rated voltage. Ignore Resistance.	**07**

OR

Q.4	**(a)**	Explain line-to-line fault. Write terminal conditions at fault location. Derive expression of fault current and draw the connection of sequence networks.	**07**
	(b)	(i) Why transient stability limit is lower than steady state stability limit?	**04**
		(ii) Prove that the zero and negative sequence components of voltage are absent in a balanced three phase system.	**03**
Q.5	**(a)**	Describe the traditional technique and new approaches for improvement of transient stability limit of a power system.	**07**
	(b)	Derive the power angle equation $P = \frac{E_G E_M}{X} \sin \delta$ with usual notations.	**07**

OR

Q.5	**(a)**	Explain in brief various methods of Control of voltage Profile in Power System. Explain each method in detail.	**07**
	(b)	(i) What do you mean by infinite bus? What is meant by synchronizing of alternators?	**03**
		(ii) Two alternators are operating in parallel. Explain the effect of increasing the excitation of one of the alternator.	**04**

****