Seat No.: _____ Enrolment No._____

GUJARAT TECHNOLOGICAL UNIVERSITY

BE - SEMESTER–VII • EXAMINATION – SUMMER • 2015

Subject code: 172302 **Date: 08/05/2015**
Subject Name: Plastic Mould and Die Design-I
Time: 02.30pm-05.00pm **Total Marks: 70**

Instructions:

1. **Attempt all questions.**
2. **Make suitable assumptions wherever necessary.**
3. **Figures to the right indicate full marks.**

Q.1 **(a)** For the product shown in the fig.[a], workout the feed system dimensions . **07**

(b) Draw a suitable hand injection mould for the product shown in fig.[a]. **07**

Q.2 **(a)** Discuss the importance of Lathe and Shaping machines in a toolroom **07**

(b) The shot capacity of an Injection moulding machine is 100 gms. It is desired to mould the product shown in fig.[b] on this machine. Work out the no.of impressions that can be moulded on this machine. **07**

Bulk factor of PS = 1.4
Bulk factor of PP = 1.9
Specific gravity of PS= 1.04
Specific gravity of PP = 0.9

OR

(b) Discuss in detail about Pin Ejection **07**

Q.3 **(a)** Define : Guide pin , insert , push back pin , bolster , milling ; ejector grid , shot capacity **07**

(b) Fill in the blanks: **07**

a. Material of guide pin is _____
b. Ring gate is used for _____products
c. Rectangular edge gate cannot be used for _____materials.
d. _____is the advantage of a fan gate.
e. Sprue gate is used for _____products.
f. Material of construction of a Insert is _____
g. Minimum diameter of a runner is _____

OR

Q.3 **(a)** What are the requirements of a runner? Discuss with calculation which runner has the highest efficiency. **07**

(b) A rectangular box molded in PP has dimensions of 150x110x30mm. Top open, this box has wall thickness of 2mm throughout. If a 2 impression mould is desired , do the feed system calculations . **07**

Q.4 **(a)** Discuss the difference between integer and insert bolster type of moulds and give applications . **07**

(b) Discuss Stripper plate Ejection in detail. **07**

OR

Q.4 **(a)** A product in HDPE weighing 10 gms is to be molded on an injection moulding machine having shot capacity of 200 gms. Work out how many impressions can be moulded on this machine .Assume bulk factor of HDPE = 1.8 ; Specific gravity of HDPE = 0.96. Bulk factor of PS= 1,4; sp.gr.of PS=1.04 **07**

Q.4 **(b)** Discuss advantages, disadvantages and applications of Pin Gate; Submarine Gate ; Overlap gate ; rectangular edge gate; tab gate ; ring gate and diaphragm gate. **07**

Q.5 **(a)** Calculate the shot capacity of the injection moulding machine if a product of weight 10 gms is to be moulded in ABS and a 20 impression mould is desired. Assume: **07**

Bulk factor of PS = 1.9
Bulk factor of ABS = 1.8
Specific gravity of PS = 1.04
Specific gravity of ABS= 1.0

(b) Tick the correct one: **07**

1. Material of Bolster is (a) MS (b) EN-24 (c) EN-8 (d) EN 48B (e) none of these
2. Function of ejector pin is [a] To eject the product. [b] to protect the core/cavity while mould opening.[c] to protect the core/cavity while mould closing [d] none of these.
3. Grinding operation removes metal in (a) Millimeters (b) Cms Microns (d) None of these
4. For removal of metal burrs from the holes , the operation done is [a] grinding [b] honing [c] reaming [d] polishing
5. Gate has a minimum crosssectional area due to : (a) To increase pressure drop (b) to offer resistance so that impression fills completely.(c) to decrease pressure drop (d) none of these.
6. Stripper plate ejection is preferred for (a) short hollow products (b) tall hollow products (c) solid tall products (d) multiple cavity products.
7. Function of Ejector retainer plate is (a) to hold the ejector element (b) to hold the ejector plate (c) to protect the ejector plate (d) none of these.

OR

Q.5 **(a)** Write about the machining operations required for a rectangular plate of 200x150x50mm which has equidistant holes at every 40mm length and breadth . **07**

(b) Write the functions, advantages and disadvantages of Milling, Drilling , EDM and Grinding machines **07**

Subject Code : 172302

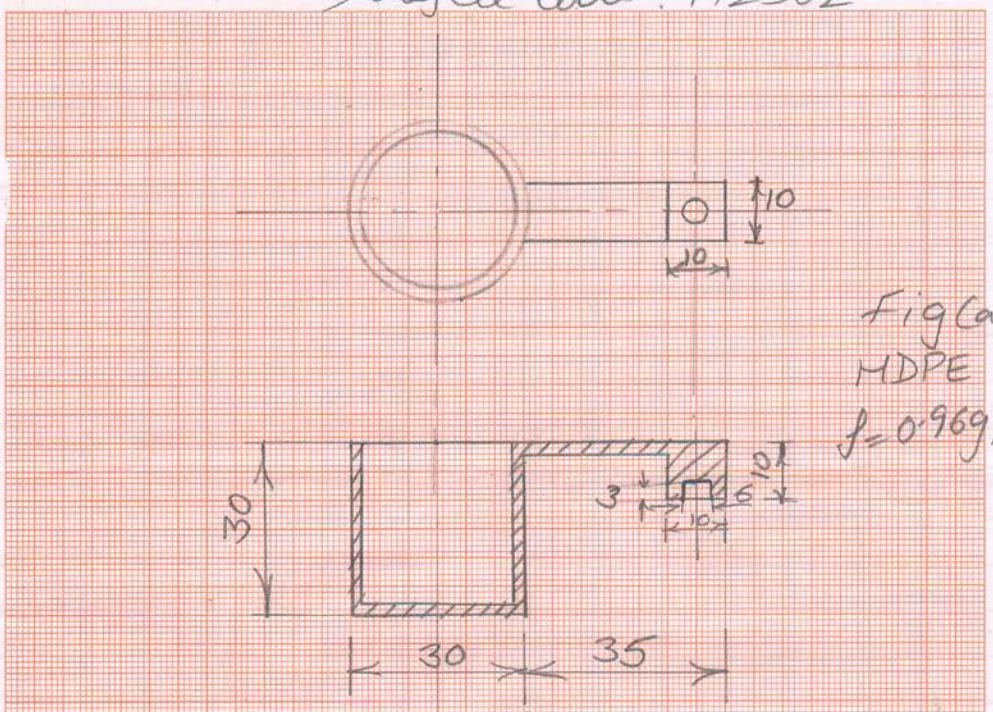

Fig (a)
HDPE
$\rho = 0.96 g/cc$

Fig (b)
PP
$\rho = 0.9 g/cc$