Seat No.: _____ Enrolment No._____

GUJARAT TECHNOLOGICAL UNIVERSITY

BE - SEMESTER–VIII • EXAMINATION – SUMMER • 2015

Subject code: 182003 **Date:13/05/2015**

Subject Name: Quality Assurance & Reliability

Time:10.30AM-01.00PM **Total Marks: 70**

Instructions:

1. **Attempt all questions.**
2. **Make suitable assumptions wherever necessary.**
3. **Figures to the right indicate full marks.**

Q.1 **(a)** Explain Management responsibility, quality policy and Internal quality audit in the context of ISO 9001 certification. **07**

(b) Define TQM. Explain in detail at least two key elements of TQM. **07**

Q.2 **(a)** What do you mean by redundancy? Explain various types of redundancies with graph. Show the best redundancy with suitable example. **07**

(b) The Mean Time to Failure (MTTF) is simply the reciprocal of the hazard rate, for a constant hazard model. Prove it. It is observed that the failure pattern of an electronic system follows an exponential distribution with mean time to failure of 1600 hours. What is the probability that the system failure occurs within 770 hours? **07**

OR

(b) Five elements (a, b, c, d & f) of a system are connected as shown in the figure below, which indicates the reliability of each element. Calculate the system reliability using reduction to series elements. **07**

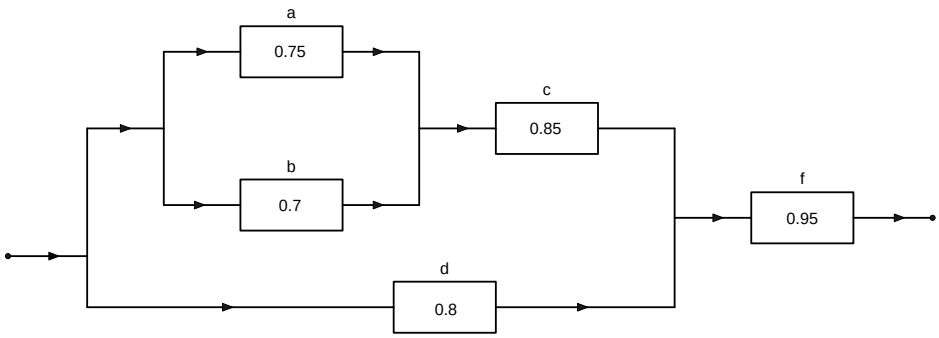

Q.3 **(a)** Following are the inspection results of a piston rings manufactured in 10 lots of 250 nos. each. Calculate the control limits, draw a suitable control chart and state whether the process is under statistical control or not. Compute the control limits for the future production. **07**

Observation No.	1	2	3	4	5	6	7	8	9	10
No. of defectives	32	15	15	20	16	23	15	19	17	19

(b) A sub group of 5 items each are taken from a manufacturing process at a regular interval. A certain quality characteristic is measured and $\overline{X}$ and R values computed. After 25 subgroups it is found that $\Sigma\overline{X}$ =411.50 and ΣR=11.30. If the specification limits are 13.50±0.30; and if the process is under statistical control, what conclusion you can draw about the ability of the process to produce items within specification limits? (take d_2=2.326) **07**

OR

Q.3 **(a)** Evaluate: **07**

1. Quality is a relative term.
2. In order to ensure the quality of a product 100% inspection is must, irrespective of the type of product and number of units a firm is manufacturing.

(b) Explain : **07**

1. Quality Circle
2. Apex Quality Manual

Q.4 **(a)** A manufacturing process produces parts which are 2% defective. Fifty of these parts are selected at random. What is the probability that there are two or less defective parts out of the fifty selected parts? **07**

(b) A small scale weaving mill gets its supply of threads from several suppliers. Over a period of time, it has been observed that, on an average, the probability of good quality threads being supplied is 0.80 and that of poor quality threads being supplied is 0.20. In order to get a better estimate of the supply, a sample of threads is tested. However, since the testing procedure is not perfectly reliable, the probability that a good quality thread will pass the test is 0.85, where as the probability that a poor quality thread will pass the same test is 0.1. Based on this result, what is the probability that a sample of thread passing the test is really good? **07**

OR

Q.4 **(a)** I. Explain the curve of hazard rate vs time with three clear zones on it. **03**

II. Explain mean failure rate and MTTF. **04**

(b) Explain various methods of solving complex systems to calculate the system reliability. **07**

Q.5 **(a)** Following is the data for defects on a tank used in an aerospace application. Draw a Pareto diagram and give your comments. **07**

Type of defect	Defect Code	Frequency
Parts damaged	A	34
Machining problem	B	29
Supplied part rusted	C	5
Masking insufficient	D	7
Misaligned weld	E	11
Wrong part issued	F	5
Adhesive failure	G	8
Paint damaged by etching	H	6
Voids in casting	I	9
Incorrect dimensions	J	36

(b) Double row ball bearings of the same size are made in lots of 1000 each. Following are the results of number of defects in first 9 lots. Draw an appropriate chart and comment on the stability of the process. Also compute control limits for the future production. **07**

Lot No.	1	2	3	4	5	6	7	8	9
No. of defects	42	61	72	44	34	22	31	18	25

OR

Q.5 **(a)** Explain the following: **07**

i. Consumer's risk and Producer's risk
ii. Variable & discrete type of data

(b) Explain the following: **07**

i. DMAIC approach of 6σ
ii. Quality Control

****