Seat no.:_____ **Enrollment No.:_____**

GUJARAT TECHNOLOGICAL UNIVERSITY

BE-SEMESTER-III(NEW) EXAMINATION – SUMMER 2015

Subject code: 2132001 **Date: 29/05/2015**

Subject Name : Industrial Drafting

Time: 02.30pm-05.30pm **Total Marks: 70**

Instructions.

1. Attempt all questions.
2. Make suitable assumptions where ever necessary.
3. Figures to the right indicate full marks

Q-1	(a)	Distinguish clearly between aligned system and unidirectional system with the help of neat sketches.	06
	(b)	Draw a neat sketches of chain dimensioning and parallel dimensioning.	04
	(c)	Draw a neat sketches of the convention of the following materials: (i) Wood (ii) glass (iii) zinc metal (iv) concrete.	04
Q-2		A cast iron block is shown in figure-(1). Draw the following orthographic views using first angle method. (i) Sectional elevation (ii) plan and (iii) RH side view.	14
		OR	
Q-2	(a)	A pictorial view of a machine component shown in figure- (2). Draw the following orthographic views: (i) Sec. Elevation and (ii) plan.	08
	(b)	Explain with neat sketches the following. (i) blined hole (ii) tapped hole and (iii) countersunk hole	06
Q-3		A vertical square prism, base 50 mm, side is completely penetrated by horizontal square prism, base 35 mm side so that their axes are 6mm apart. The axis of horizontal prism parallel to the VP and 6 mm apart .the faces of both the prisms equally inclined to the VP. Draw the projections giving three views.	14
		OR	
Q-3		A cone 100 mm diameter of the base and axis 87 mm is resting on its base in the HP. A square hole of 35 mm side is drill through from the front of the cone. The axis of the hole is perpendicular to the VP and 30mm above the base. All sides of the square hole are equally inclined to the HP. Draw the three views of this cone.	14
Q-4	(a)	Draw a neat sketch of knuckle joint giving two views.	10
	(b)	Explain with a neat sketches four different types of keys.	04
		OR	
Q-4	(a)	Explain with a neat sketch the hook foundation bolt.	08
	(b)	Show with a neat sketches the locking arrangement for the nut.	06

(i) slotted nut (ii) sawn nut (iii)simmond's nut

Q-5	(a)	Draw a neat sketch of cast iron flat belt pulley.	06
	(b)	What is surface roughness? How it is represented in engineering drawing?	04
	(c)	Explain with neat sketches the hole basis and shaft basis systems.	04

OR

Q-5	(a)	Prepare a neat sketch of hexagonal bolt with hexagonal nut with washer.	04
	(b)	Draw a neat sketch of a flange coupling.	06
	(c)	Give a brief report on the computer hardware peripheral and CAD software in your laboratory.	04

ALL THE BEST

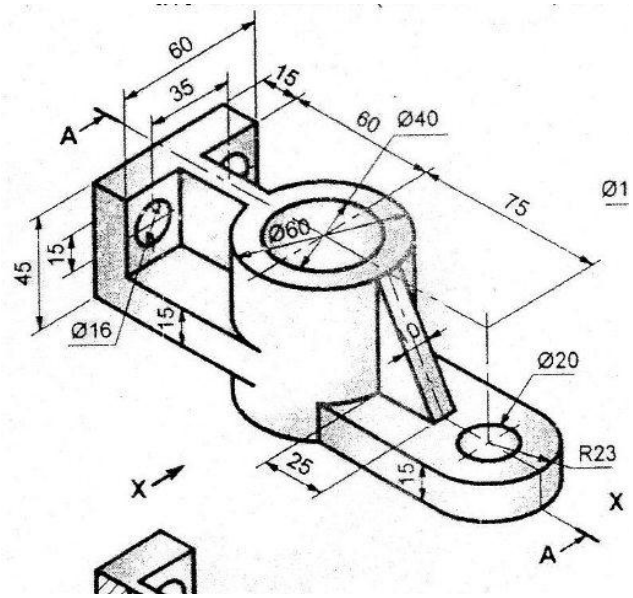

C.I. Block Figure -(1) :Q-2

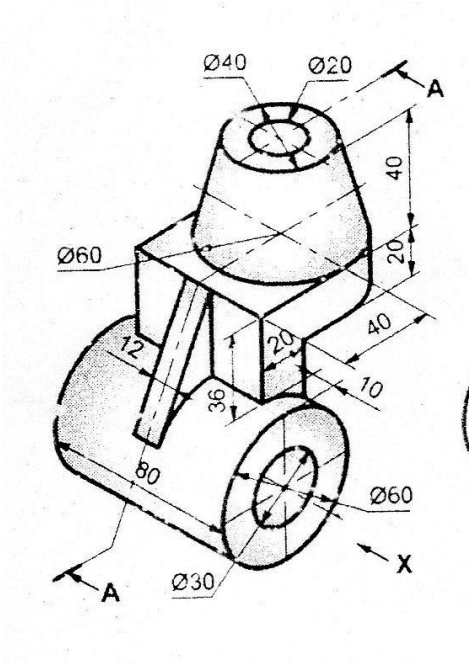

MACHINE COMPONENT FIGURE – (2) : -(2)