Seat No.: _____ Enrolment No._____

# GUJARAT TECHNOLOGICAL UNIVERSITY

**BE SEMESTER–I & II (SPFU) REMEDIAL EXAMINATION – SUMMER 2015**

**Subject Code: ENG002** **Date: 27/05/2015**

**Subject Name: ENGINEERING GRAPHICS**

**Time:10.30AM-01.30PM** **Total Marks: 70**

**Instructions:**

1. **Attempt ANY FIVE questions. 2. Make suitable assumptions wherever necessary.**
3. **Figures to the right indicate full marks. 4. Retain all construction lines.**
5. **Lines, dimensions etc. should be as per BIS-SP-46.**

**Q.1** **(a)** List different drawing instruments and write its applications. **04**

**(b)** Fig.1 Shows the pictorial view of an object. **10**

Draw the following views (i) front view (ii) right hand side view (iii) Top view

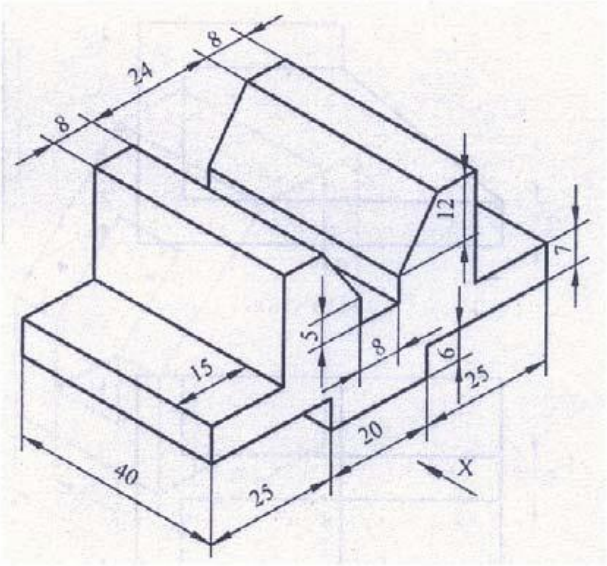


**Q.2** **(a)** A line AB, 80mm long, is inclined to HP by 30º and inclined to VP by 45º. The line is in first quadrant with point A 15mm above HP and 30mm in front of VP. Draw the projection of line AB. **07**

**(b)** A hexagonal plate is resting on one of its side on H.P. The side on which it rests makes an angle of 45º with V.P. and the plate makes an angle of 30º with H.P. Draw the projections of the plate. **07**

**Q.3** **(a)** A circular plate of negligible thickness having 70mm diameter is resting on HP on a point of the circumference. Plate is kept perpendicular to VP and inclined to the HP such that the plan of it is an ellipse of minor axis 40mm. Draw the projections of plate. **07**

**(b)** Draw involute of a circle having diameter of 30 mm. Also draw tangent and normal to the curve. **07**

**Q.4** **(a)** A cylinder, 30mm diameter and 50mm height, is resting on horizontal plane (HP) on tis base. Draw development of the lateral surfaces of the cylinder. **07**

**(b)** Draw an ellipse having major axis 120 mm and minor axis 80 mm. Also draw tangent and normal to the curve. **07**

**Q.5** **(a)** A pentagonal pyramid has height 60 mm and the side of a base 30 mm. The pyramid rests on one of its sides of the base on the H.P. such that the triangular face containing that side is perpendicular to the H.P. and makes an angle of 45 **10**

degree with the V.P. Draw its projections.

**(b)** (i) Define representative factor (RF). Construct a plain scale in which 1 cm represents 1 kms. The scale should be long enough to measure a distance of 16 kms. Also represent a distance of 12 kms and 7 hectometers on the scale. **04**

**Q.6** **(a)** Prepare isometric scale to measure 100 mm long line. **04**

**(b)** Draw the isometric view of the following orthographic views shown in Fig. **10**

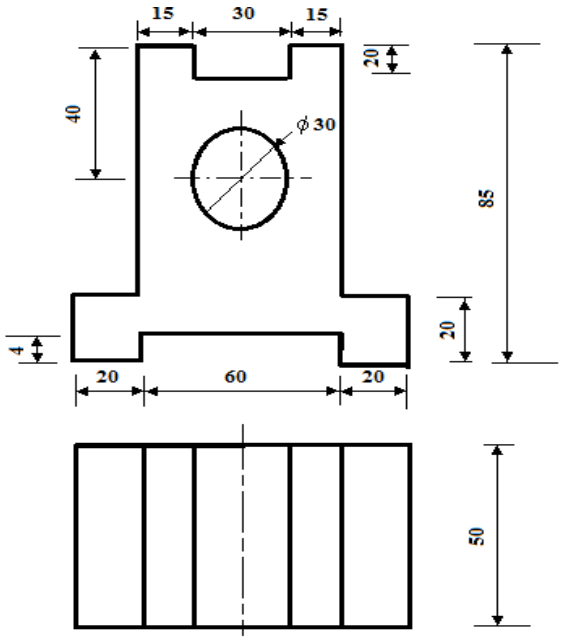


**Q.7** **(a)** Rod AB, 100 mm long, revolves in clockwise direction for one revolution. Meanwhile point P, initially on A starts moving towards B and reaches B. Draw locus of point P. **04**

**(b)** Choose the correct alternative: **10**

**1.** When a line is inclined to HP & parallel to VP, the top view will be __ to xy.
(a) parallel (b) perpendicular (c) inclined at angle φ (d) non on these

**2.** Name the solid formed by cutting a cone through a plane perpendicular to its axis: (a) Square pyramid (b) Triangular pyramid (c) Tetrahedron (d) frustum.

**3.** A line is inclined at 30º to HP and 60º to VP. It will be ____ to Profile plane.
(a) Parallel (b) perpendicular (c) inclined at angle φ (d) non on these.

**4.** As per the drawing standards continuous thin line is used to draw _____.
(a) Object out lines (b) center line (c) constriction line (d) hidden edges.

**5.** When the axis of the solid is parallel to HP and perpendicular to VP the view which reveals the true shape of the base is
(a) Front view (b) Top view (c) Side view (d) None of these

**6.** As per the drawing standards chain line is used to draw _____.
(a) Object out lines (b) center line (c) constriction line (d) hidden edges.

**7.** As per the drawing standards continuous thick line is used to draw _____.
(a) Object out lines (b) center line (c) constriction line (d) hidden edges.

**8.** For drawing of small instruments, watches etc. the scale used is
(a) Reduced scale (b) Full scale (c) Enlarged scale (d) none of these

**9.** Second angle projection is not used because
(a) Plan is above xy (b) both views overlap each other
(c) elevation is above xy (d) views are small in size

**10.** Length of a line 'L' in isometric drawing or view will be
(a) 0.707 L (b) 0.815 L (c) 0.866 L (d) equal to length L

**********