Seat No.: _____ *Enrolment No._____*

GUJARAT TECHNOLOGICAL UNIVERSITY

BE SEM-III Examination May 2012

Subject code: 133405

Subject Name: MANUFACTURING AND ASSEMBLY DRAWING

Date: 15/05/2012 **Time: 02.30 pm – 05.00 pm**

Total Marks: 70

Instructions:

1. **Attempt all questions.**
2. **Make suitable assumptions wherever necessary.**
3. **Figures to the right indicate full marks.**

Q.1 **(a)** Draw the Conventions for the following Machine elements: **07**
I) External Threads, II) Bearings, III) Straight Knurling, IV) Square end of Shaft, V) Tension Helical Spring, VI) Leaf Springs with eyes, VII) Bearing.

(b) Fill in the Blanks: **07**
I) The abbreviation for Cast Iron is _____.
II) The abbreviation for Mild Steel is _____.
III) M/C is the abbreviation for _____.
IV) APPROX is the abbreviation for _____.
V) The two extreme permissible sizes between which the actual size lies are called _____.
VI) The symbol for Surface texture by Machining Process is _____.
VII) The conventional representation of Glass is _____.

Q.2 **(a)** Explain about Hole basis system with the help of a suitable example. **07**

(b) Define & show the diagrammatic representation of the following: **07**
I) Clearance fit, II) Interference fit

OR

(b) Draw the Geometric characteristic symbols for the following: **07**
I) Straightness, II) Flatness, III) Circularity, IV) Cylindricity, V) Parallelism, VI) Angularity, VII) Runout.

Q.3 Fig 1 shows the views of the different parts which form a Socket & Spigot cotter joint. Assemble the parts & show the sectional front view to 1:1 scale. **14**

OR

Q.3 Views of all the parts of a solid Muff coupling are shown in Fig 2. Draw the sectional front view of a Solid Muff Coupling. **14**

Q.4 Fig 3 Shows a production drawing of a machine part. Explain the meaning of each symbol shown on the drawing. **14**

OR

Q.4 **(a)** Draw the conventional Representation of the following machine parts in the Production drawing. I) Holes on a circular pitch, II) Ratchet & Pinion, III) Slotted Head Screw, IV) Helical Compression Spring. **07**

(b) Define I) Tolerance, II) Fits, III) Basic Size, IV) Nominal Size, V) Allowance, VI) Clearance. **07**

Q.5 Fig 4 shows the details of a drawing of a stuffing box for a small steam engine. Assemble the parts & draw the Half Sectional elevation. **14**

OR

Q.5 Draw the Standard 2- Plate Injection Mould & prepare the Bill of Material. **14**

****

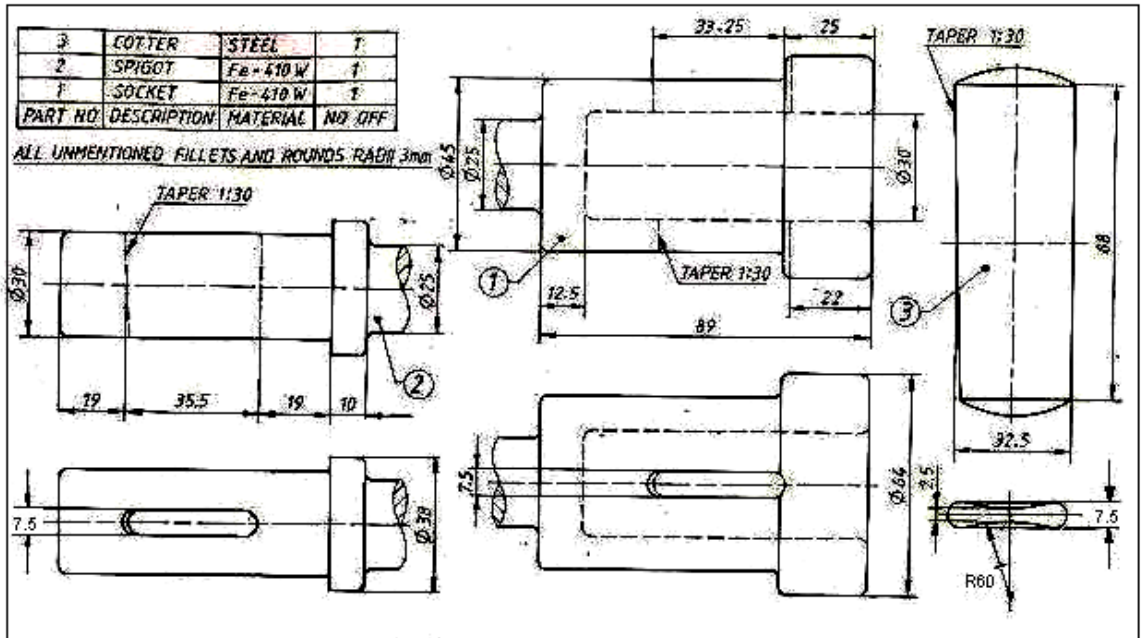

Details of Socket and Spigot Cotter Joint

Fig 1

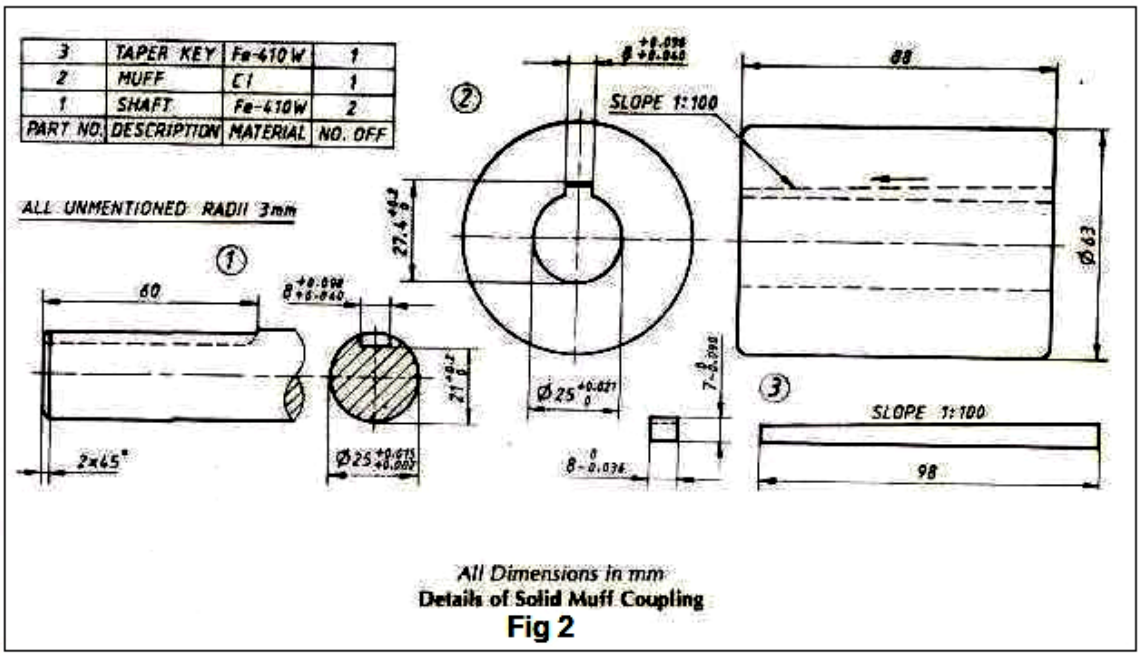

All Dimensions in mm

Details of Solid Muff Coupling

Fig 2

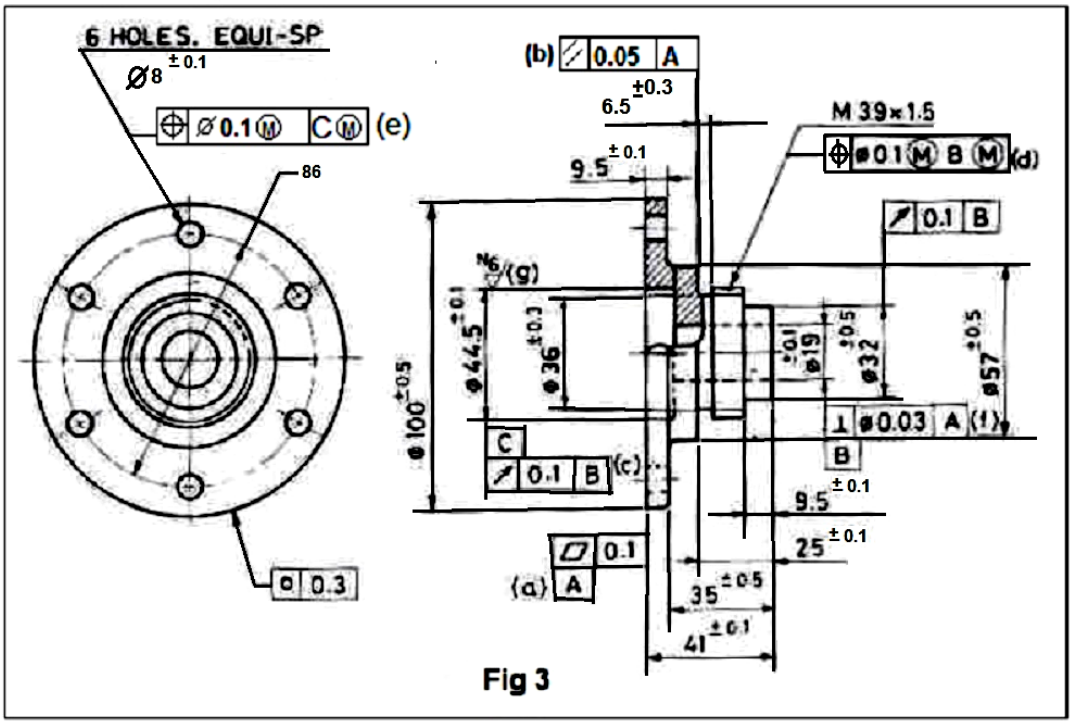

Fig 3

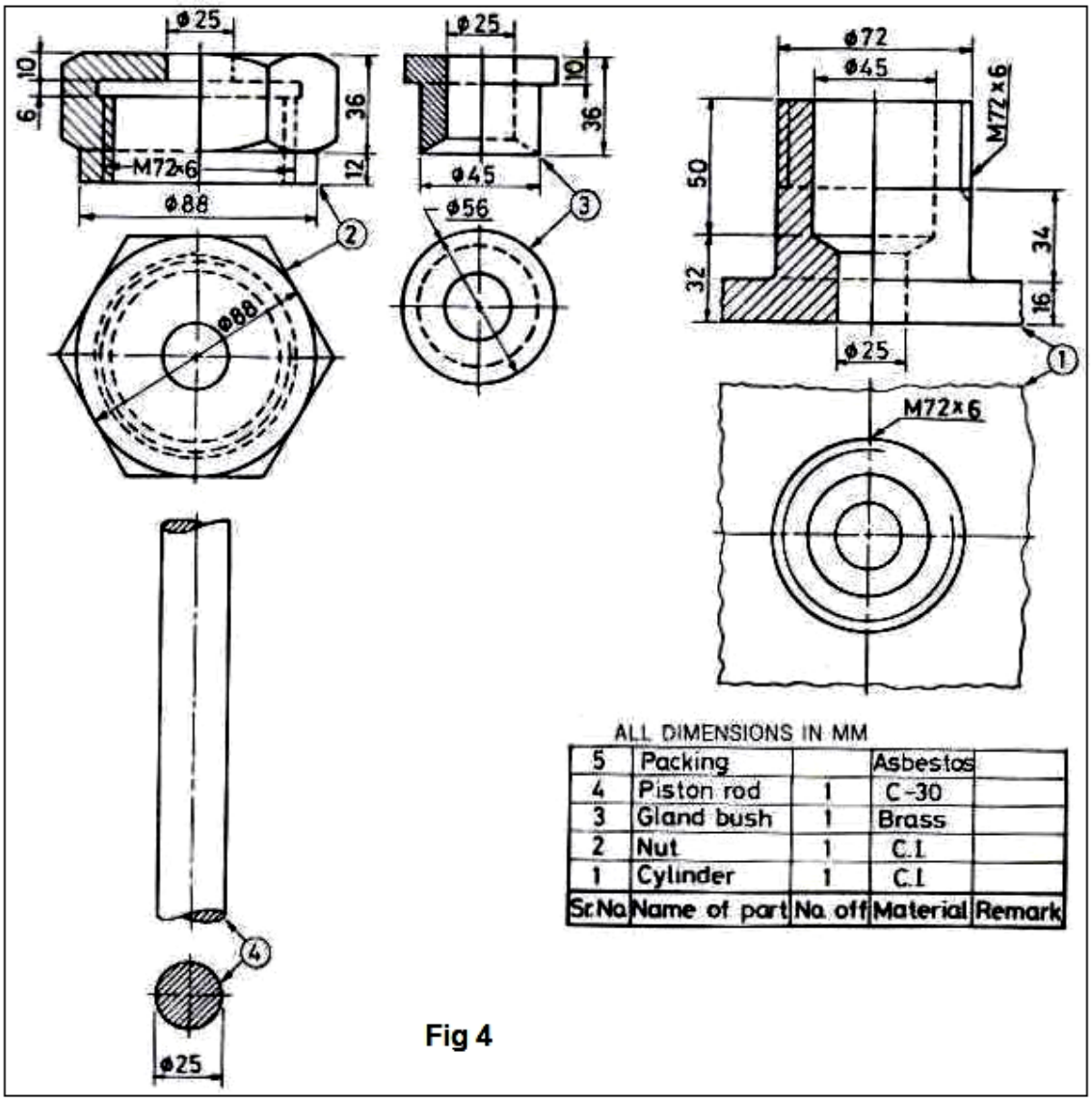

ALL DIMENSIONS IN MM

Sr.No.	Name of part	No. off	Material	Remark
5	Packing		Asbestos	
4	Piston rod	1	C-30	
3	Gland bush	1	Brass	
2	Nut	1	C.I.	
1	Cylinder	1	C.I.	

Fig 4