Seat No.: _____ Enrolment No._____

GUJARAT TECHNOLOGICAL UNIVERSITY

BE- Vth SEMESTER–EXAMINATION – MAY/JUNE - 2012

Subject code: 150103 **Date: 04/06/2012**

Subject Name: Aircraft structure II

Time: 02:30 pm – 05:00 pm **Total Marks: 70**

Instructions:

1. **Attempt all questions.**
2. **Make suitable assumptions wherever necessary.**
3. **Figures to the right indicate full marks.**

Q.1	**(a)**	State and explain with usual notations Castigliano's first theorem	**06**
	(b)	What do you understand by unsymmetrical bending? Explain the torsion of thin walled closed sections.	**04**
	(c)	Explain about limit load for load factor determination.	**04**
Q.2	**(a)**	Explain Flight envelop diagram.	**07**
	(b)	Find deflection at point B and C for the cantilever beam as shown in figure.1 using any method. Take EI=20000 kN.m^2.	**07**
		OR	
	(b)	Find horizontal deflection at point C for the truss shown in figure.2 Castigliano's first theorem. Take EI= 2.1 X 10^5 N/mm^2, A=500 mm^2.	**07**
Q.3	**(a)**	Find vertical deflection at point C for the frame shown in figure. 3 using Castigliano's first theorem. Take EI= 32000 kN.m^2.	**07**
	(b)	Obtain flexibility matrix for the beam as shown in figure. 4	**07**
		OR	
Q.3	**(a)**	Analyze the beam shown in figure. 5 using Castigliano's second theorem.	**10**
	(b)	A semicircular ring beam of radius 'r', supports a concentrated load 'P' at the free end, Calculate vertical & horizontal deflection at free end.	**04**
Q.4	**(a)**	Enlist characteristics of Flexibility matrix	**03**
	(b)	Analyze the truss as shown in figure. 6 using flexibility system approach.	**11**
		OR	
Q.4	**(a)**	Differentiate Flexibility and Stiffness	**03**
	(b)	Analyze the beam as shown in figure. 7 using stiffness system approach.	**11**
Q.5	**(a)**	A box beam as shown below is subjected to a vertical shear force of 250 kN. The bending Analysis, neglecting bending stress gives axial stiffener between cross section 1 cm apart as Shown in figure 8. Determine the shear flow in the box beam.	**07**
	(b)	A beam of size 600 mm x 400 m is subjected to a bending moment of 10 kN.m at an angle of 60^0 w. r. t y axis. Locate the neutral axis and determine stresses at all corners.	**07**
		OR	
Q.5	**(a)**	The vertical shear action on a channel section is 150 KN. Find the shear flow and shear center of the section as shown in Fig. Assume thickness in flange as 9.7 mm and thickness of web 6.7 mm I = 71.97 x 10 ^{6} mm ^{4}	**07**
	(b)	Explain thin walled open sections & closed sections and define shear center with its Practical significance.	**07**

****

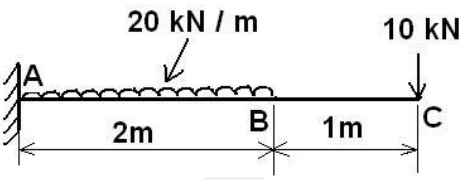

Fig. 1

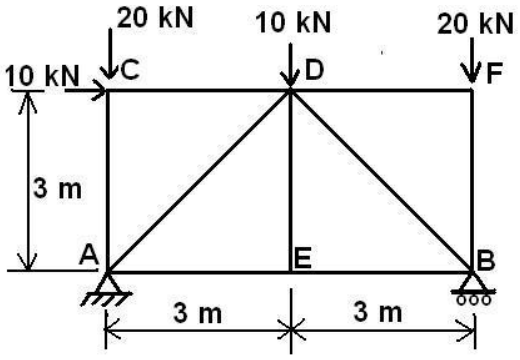

Fig. 2

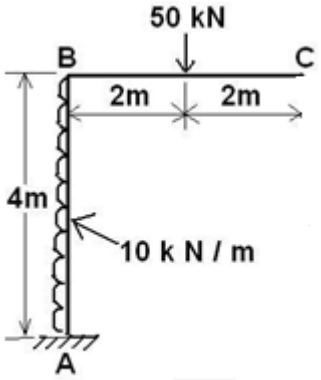

Fig. 3

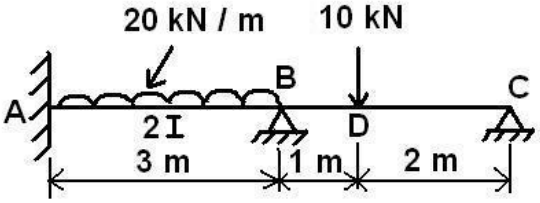

Fig. 5

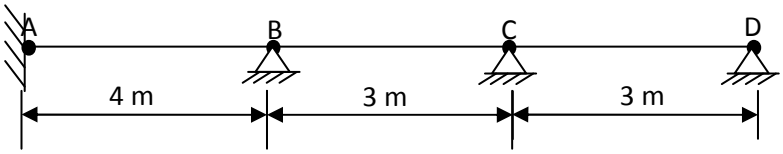

Figure 4

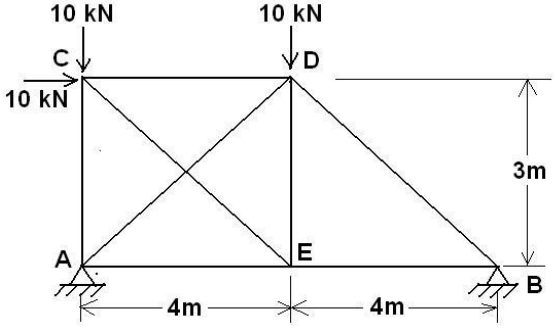

Figure 6

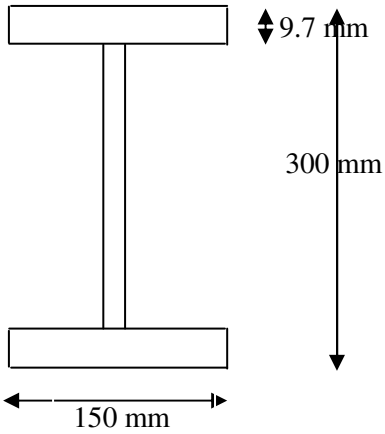

Figure 9

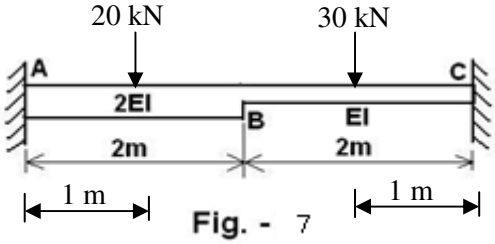

Fig. - 7

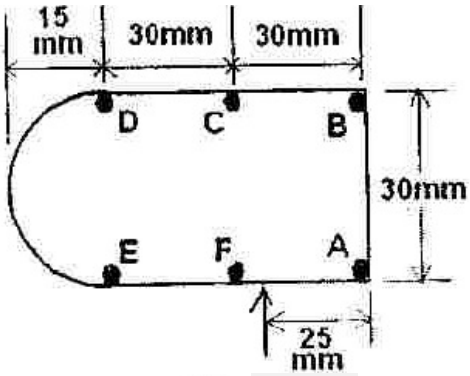

Fig. 8(a)

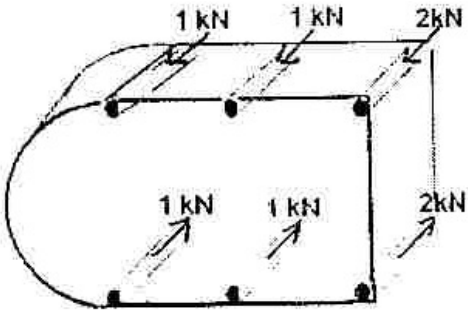

Fig. 8 (b)