Seat No.: _____ *Enrolment No._____*

GUJARAT TECHNOLOGICAL UNIVERSITY

BE- VIIth SEMESTER–EXAMINATION – MAY/JUNE- 2012

Subject code: 170302 **Date: 08/06/2012**

Subject Name: Physiological System Modeling

Time: 02:30 pm – 05:00 pm **Total Marks: 70**

Instructions:

1. **Attempt all questions.**
2. **Make suitable assumptions wherever necessary.**
3. **Figures to the right indicate full marks.**

Q.1	**(a)**	Draw & describe the physiological control system for knee reflex.	**07**
	(b)	What is the need of physiological modeling? Explain with example.	**07**
Q.2	**(a)**	Explain the venous return with necessary equations. Plot the venous return curve.	**07**
	(b)	Plot the responses of the second-order lung mechanics model to a unit impulse under open-loop and closed-loop modes.	**07**
		OR	
	(b)	What is the difference between non-parametric & parametric model.	**07**
Q.3	**(a)**	Draw the schematic model of regulation of glucose & insulin.	**07**
	(b)	What is starling's law for regulation of cardiac output? Explain with necessary equations.	**07**
		OR	
Q.3	**(a)**	Describe the frequency response of a model for circulatory control with necessary graphs.	**07**
	(b)	Explain cheyne-stokes breathing Model.	**07**
Q.4	**(a)**	Draw the SIMULINK model for glucose-insulin regulation.	**07**
	(b)	Explain how to determine the steady-state operating point.	**07**
		OR	
Q.4	**(a)**	Describe the difference of Distributed Parameter Versus Lumped Parameter.	**07**
	(b)	Explain westheimer's saccadic eye movement model.	**07**
Q.5	**(a)**	Give equations to explain "Capacitance" in mechanical, Fluidic, Thermal & Chemical systems.	**04**

(b) Develop the mechanical equivalent of the electrical analog of respiratory mechanics shown in below given figure. **10**

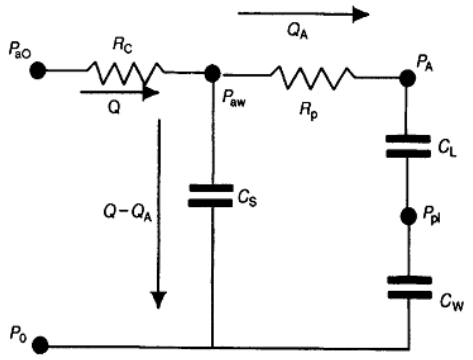

OR

Q.5 **(a)** Give equations to explain "Resistance" in mechanical, Fluidic, Thermal & Chemical systems. **04**

(b) Draw the frequency responses of the systems shown in Figure when: **10**

(a) The feedback loop is open

(b) The feedback loop is closed.

In both cases, assume the time delay, T, to be 1 second.

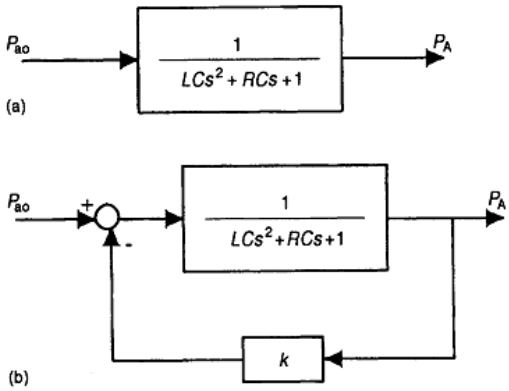

****